Air Conditioner Product Manual

Vertical Wall-Mount Air Conditioners with Gas Heat & Front Control Box Panel

Installation & Operation Manual

11 EER Vertical Wall-Mount
Air Conditioners w/Gas Heat

MODELS:

HAA1024A-HAA1030A-HAA1036A

HAA1042A-HAA1048A-HAA1060A

IMPORTANT

This manual may include information for options and features which may not be included on the unit being installed. Refer to the unit data label or Model Identification to determine which features and options this unit is equipped with.

INSTALLER: Affix the instructions on the inside of the building adjacent to the thermostat.
END USER: Retain this manual for future reference.

Manufactured By:

Eubank, An AirX Climate Solutions Brand

P.O. Box 400 • Cordele, Georgia 31010 • 156 Seedling Drive • Cordele, Georgia 31015
(229) 273-3636 • Fax (229) 273-5154
E-mail: eubanksales@airxcs.com • Internet: www.EubankWallMount.com

The most current version of this manual can be found at www.EubankWallMountcom.

Eubank HAA A/C w/Gas Heat I&O Manual 04/2024 Rev.8

How To Use This Manual

This manual is intended to be a guide to Eubank HAA family of vertical air conditioners with gas heat. It contains installation, troubleshooting, maintenance, warranty, and application information. The information contained in this manual is to be used by the installer as a guide only. This manual does not supersede or circumvent any applicable national or local codes.

If you are installing the HAA unit, first read Chapter 1 and scan the entire manual before beginning the installation as described in Chapter 2. Chapter 1 contains general, descriptive information and provides an overview which can speed up the installation process and simplify troubleshooting.

If a malfunction occurs, follow this troubleshooting sequence:

1. Make sure you understand how the HAA unit works (Chapters 1 & 3).
2. Identify and correct installation errors (Chapter 2).
3. Refer to the troubleshooting information in Chapter 4.

If you are still unable to correct the problem, contact the Factory at 1-800-841-7854 for additional assistance.

Please read the following "Important Safety Precautions" before beginning any work.

Important Safety Precautions

1. USE CARE when LIFTING or TRANSPORTING equipment.
2. TRANSPORT the UNIT UPRIGHT. Laying it down on its side may cause oil to leave the compressor and breakage or damage to other components.
3. TURN ELECTRICAL POWER OFF AT THE breaker or fuse box BEFORE installing or working on the equipment. LINE VOLTAGES ARE HAZARDOUS or LETHAL.
4. OBSERVE and COMPLY with ALL applicable PLUMBING, ELECTRICAL, and BUILDING CODES and ordinances.
5. SERVICE may be performed ONLY by QUALIFIED and EXPERIENCED PERSONS.
   - *** Wear safety goggles when servicing the refrigeration circuit**
   - *** Beware of hot surfaces on refrigerant circuit components**
   - *** Beware of sharp edges on sheet metal components**
   - *** Use care when recovering or adding refrigerant**
6. **Use COMMON SENSE - BE SAFETY-CONSCIOUS**

This is the safety alert symbol ⚠. When you see this symbol on the HAA unit and in the instruction manuals be alert to the potential for personal injury. Understand the signal word DANGER, WARNING, CAUTION and IMPORTANT. These words are used to identify levels of the seriousness of the hazard.

⚠ DANGER	Failure to comply will result in death or severe personal injury and/or property damage.
⚠ WARNING	Failure to comply could result in death or severe personal injury and/or property damage.
⚠ CAUTION	Failure to comply could result in minor personal injury and/or property damage.
IMPORTANT	Used to point out helpful suggestions that will result in improved installation, reliability or operation.

SPECIFICATIONS SUBJECT TO CHANGE WITHOUT NOTICE.

© **04/2024** Eubank, An AirX Climate Solutions Brand

⚠ WARNING - SAFETY REQUIREMENTS

- **If the information in these instructions are not followed exactly, a fire, carbon monoxide poisoning or explosion may result causing property damage, personal injury or loss of life.**
- **Read all instructions carefully prior to beginning the installation. Do not begin installation if you do not understand any of the instructions.**
- **Improper installation, adjustment, alteration, service or maintenance can cause property damage, personal injury or loss of life.**
- **Installation and service must be performed by a qualified installer, service agency or the gas supplier in accordance with these instructions and in compliance with all codes and requirements of authorities having jurisdiction.**
- **Follow all safety codes.**

⚠ AVERTISSEMENT - EXIGENCES POUR LA SÉCURITÉ

- **Si les informations contenues dans ces instructions ne sont pas suivies exactement, ipeut en résulter un empoisonnement au monoxyde de carbone ou une explosion, causant dommages, blessure ou mort.**
- **Lisez soigneusement toutes les instructions avant de commencer l'installation. Ne la commencez pas si vous n'avez pas assimilé toutes ces instructions.**
- **Une mauvaise exécution d'installation, réglage, altération, intervention ou entretien peut causer dégâts matériels et dommages corporels ou même mort.**
- **Installation et interventions doivent être effectuées par un installateur ou une agence de dépannage qualifiés, ou par le fournisseur de gaz en conformité avec toutes les normes et exigences des autorités ayant juridiction en la matière.**
- **Respectez toutes les normes de sécurité.**

Table of Contents

Chapter 1 - Description & Specifications

1.1 General Description 5
1.2 Model Identification 6
1.3 Serial Number Date Code 6
1.4 Cooling Mode 6
1.5 Sequence of Operation - Heating Mode 7
1.6 Ventilation Options 8
1.7 Economizer Operation – Cooling Cycle (unit with economizer only) 9

Chapter 2 Electronic Control Board

2.1 Introduction 10
2.2 Installation and Replacement 11
2.3 PCB Details and Information 11
2.4 Operation 15
2.5 Sequence of Operation 15

Chapter 3 – Safe Installation Requirements

3.1 Safety Rules 28

Chapter 4 – Installation

4.1 Location and Clearances 30
4.2 Installation Requirements 31
4.3 Dimensional Data 33
4.4 Equipment Inspection 36
4.5 Clearances 36
4.6 Installation Materials 37
4.7 Porting and Duct Work 38
4.8 General Information 38
4.9 Wall Openings 38
4.10 Minimum Airflow Requirements 38
4.11 Ducting 39
4.12 Hanging the Unit on the Wall 39
4.13 Gas Supply and Piping 40
4.14 Gas Supply Requirements 40
4.15 Gas Piping Requirements 40
4.16 Electrical Connections 43
4.17 Venting of the Furnace 47
4.18 Installation of the Vent Hood. 47

Chapter 5 – Checks and Adjustments
5.1 Gas Supply Pressure 48
5.2 Manifold Gas Pressure Adjustment 48
5.3 Natural Gas Input Rating Check 50
5.4 Orifice Sizing 50
5.5 LP Gas Conversion 51
5.6 High Altitude Installations 53
5.7 Changing Orifices 54
5.8 Main Burner Flame Check 55
5.9 Temperature Rise Range 55
Chapter 6 – Start-up
6.1 Cooling Cycle 56
6.2 Heating Cycle 56
6.3 Start-Up Checklist....58
Chapter 7 – Maintenance
7.1 Maintenance – Burner and Vent Outlet. 59
7.2 Air Filter 59
7.3 Indoor Coil 59
7.4 Outdoor Coil 59
7.5 Cabinet 59
7.6 Drains 60
7.7 Lubrication 60
7.8 Burner Flame 60
7.9 Burner 61
7.10 Combustion Air Inlet and Outlet 61
7.11 Venting of the Furnace 61
7.12 Clearances 61
Chapter 8 – Parts List....62
Chapter 9 – Warranty Policy
9.1 Marvair Limited Product Warranty....64

Illustrations

Figure 1. Enthalpy Sensor & Temperature Control Points 20
Figure 2. Dry Bulb Sensor....21
Figure 3a. Models HAA1024A/HAA1030A/HAA1036A Dimensional Data....33
Figure 3b. Models HAA1042A/HAA1048A Dimensional Data....34
Figure 3c. Models HAA1060A Dimensional Data 35
Figure 4. Mounting the Unit on a Wall....39
Figure 5a. Typical Electrical Schematic - 1Ø Power Supply....45
Figure 5b. Typical Electrical Schematic - 3Ø Power Supply....46
Figure 6. Vent Hood Installation 47
Figure 7. Gas Valve Manifold Pressure Tap....49
Figure 8. Gas Valve Protective Cover 49
Figure 9. Gas Valve Manifold Pressure Tap....52
Figure 10. Gas Valve Protective Cover 53
Figure 11. Burner Flame 55
Figure 12. Gas Control Valve Switch....56
Figure 13. Burner Flame 60

Tables

Table 1. Minimum Clearances from Unprotected Combustible Material and For Service 30
Table 2. Electrical Rating Designations 32
Table 3. Minimum Clearances from Unprotected Combustible Material and For Service 36
Table 4. Gas Pressures.....40
Table 5. Natural Gas Input Rating.....50
Table 6. Altitude/Orifice Sizing 50
Table 7. Altitude/Orifice Sizing 54
Table 8. Temperature Rise Range 55

Chapter 1 Description and Specifications

1.1 General Description

The Eubank® HAA line of air conditioners with gas heat are high efficiency vertical wall mounted units that provide cooling and economical gas heating. In addition, various ventilation packages are factory installed for a variety of applications. Nominal cooling capacities are 24,000 BTUH, 30,000 BTUH, 36,000 BTUH, 42,000 BTUH, 48,000 BTUH and 60,000 BTUH with EER's of 11.00. Models HAA1024, HAA1030A & HAA1036A are factory set up for natural gas with nominal heating capacities of 45,000 BTUH, 67,5000 BTUH and 90,000 BTUH. Models HAA1042A, HAA1048A and HAA1060A are factory set up for natural gas with nominal heating capacities are 75,000 BTUH, 100,000 BTUH and 125,000 BTUH. The units are easily field convertible to propane.

Eubank HAA air conditioners with gas heat are designed for easy installation. All units have built-in side mounting flanges and are shipped with a bottom support bracket. All units are factory wired and charged. Service ports have been provided for field service, if required. All internal wiring is complete.

A wide selection of fresh air ventilation packages, all factory installed and tested to insure optimum performance, are available to meet various installation requirements. For school classrooms, models are available to comply with the ASHRAE 62-1999 standard, "Ventilation for Acceptable Indoor Air". The exclusive GreenWheel® energy recovery unit (ERV), provides fresh air while removing both sensible and latent heat form the incoming air stream.

All Eubank air conditioners with gas heat furnaces are tested in accordance with UL standard 1995 and listed by ETL. Performance and Efficiency Ratings are in accordance with the Air Conditioning and Refrigeration Institute (ARI) standard 390.

1.2 Model Identification

Example	H	A	A	1	0	3	6	A	A	0	9	0	C	G	+	+	+	1	D	A	+	A	1	1	+	+	+	+	+	+
Position	1	2	3	4	5	6	7	8	9	10	11	12	13	14	15	16	17	18	19	20	21	22	23	24	25	26	27	28	29	30

1	Unit Designation/Family	**H** = Eubank Wall Mount w/Gas Heat
2	Energy Efficiency Ratio (EER)	**A** = 11
3	Refrigerant Type	**A** = R-410a
4	Compressor Type/Quantity	**1** = Single
5 6 7	Unit Capacity/Nominal Cooling (BTUH)	**024 = 24,000** **042 = 42,000** **030 = 30,000** **048 = 48,000** **036 = 36,000** **060 = 60,000**
8	System Type	**A** = Air Conditioner
9	Power Supply (Volts-Hz-Phase)	**A** = 208/230-60-1 **C** = 208/230-60-3 **D** = 460-60-3
10 11 12	Heat Designation @ Rated Voltage **KW** = Kilowatt	**045** = 45,000 BTUH **090** = 90,000 BTUH **067** = 67,500 BTUH **100** = 100,000 BTUH **075** = 75,000 BTUH **125** = 125,000 BTUH
13	Ventilation Configuration	**C** = Economizer **D** = Motorized Damper w/Pressure Relief **E** = Motorized Damper w/Pressure Relief & Independent Motorized Damper Control **F** = No Free Cooling, 100% Emergency Ventilation Only w/Independent Control **H** = GreenWheel **N** = Barometric Damper w/15% OSA **N** = Barometric Damper w/15% OSA
14	Dehumidification	**G** = Hot Gas Reheat **H** = Hot Gas Reheat w/Humidity Control **J** = Hot Gas Reheat w/Return Air Limit **K** = Hot Gas Reheat w/Humidity Control & Return Air Limit **M** = Modulating Hot Gas Reheat **N** = Modulating Hot Gas Reheat w/Humidity Control **+** = None
15	Controls	**A** = Power Fail Alarm w/Additional Lockouts **C** = 24V EMS Relay Kit **D** = 24V EMS Relay Kit w/Factory Installed T-Stat **E** = Factory Installed T-Stat **+** = None
16	Operating Condition	**A** = Evaporator Freeze Sensor (EFS) **N** = Hard Start **P** = Hard Start w/Low Ambient & CCH **Q** = Hard Start w/Low Ambient & Fan Cycle Control (FCC) **R** = Crank Case Heater (CCH) **T** = Hard Start w/EFS **V** = Hard Start w/Low Ambient & CCH & EFS **W** = Low Ambient w/CCH **Y** = Low Ambient w/CCH & FCC **Z** = Low Ambient w/CCH & EFS **1** = Low Ambient w/FCC **2** = Low Ambient w/FCC & EFS **+** = None
17	Indoor Air Quality Features	**D** = Dry Bulb Sensor **E** = Dry Bulb Sensor w/Dirty Filter **G** = Dirty Filter Sensor **+** = None
18	Air Flow	**1** = Top Supply/Center Return
19	Compressor Location	**D** = Left Hand **E** = Right Hand
20	Filter Option	**A** = 2" Pleated (MERV 8, AC/HP-C) **C** = 2" Charcoal **D** = MERV 11 High Filtration Package **E** = MERV 13 High Filtration Package **F** = Filter Access Through Return Air Grille **W** = Aluminum Washable **+** = None
21	Corrosion Protection	**A** = Condenser Coil Only **C** = Evaporator Coil Only **D** = Both Coils Condenser & Evaporator **E** = All Coils Cond/Evap/Reheat **F** = Coat All **K** = Coastal Package **+** = None **$** = Special
22 23	Engineering Revision Level	A1
24	Cabinet Color	**1** = Marvair Beige (STD) **2** = Gray (STD) **3** = Carlsbad Canyon (STD) **4** = White (STD) **5** = Stainless Steel Exterior **9** = Pebble Gray **A** = Stainless Steel - Unit **$** = Custom Color (Powder Coat)
25	Sound Attenuation	**2** = Compressor Blanket **+** = None
26	Security Option	**A** = Lockable Access Plate/Tamper Proof **+** = None
27	Fastener/Drain Pan Option	**A** = Stainless Steel Fasteners **C** = Stainless Steel Drain Pan **D** = Stainless Steel Fasteners & Drain Pan **+** = None
28	Unused	**+** = None **$** = Special
29	Unused	**+** = None **$** = Special
30	Special Variation	**+** = None **$** = Special Configuration Not Covered by Model Nomenclature

Note: Not all options are available with all configurations. Contact your Eubank sales representative for configuration details and feature compatibility.

1.3 *Serial Number Date Code*

20 = 2020	01 = January	05 = May	09 = September
21 = 2021	02 = February	06 = June	10= October
22 = 2022	03= March	07 = July	11 = November
23 = 2023	04 = April	08 = August	12 = December

1.4 Cooling Mode

Eubank HAA air conditioners with gas heat use R410A refrigerant in a conventional vapor-compression refrigeration cycle to transfer heat from air in an enclosed space to the outside. A double blower assembly blows indoor air across the evaporator. Cold liquid refrigerant passing through the evaporator is boiled into gas by heat removed from the air. The warmed refrigerant gas enters the compressor where its temperature and pressure are increased. The hot refrigerant gas condenses to liquid as heat is transferred to outdoor air drawn across the condenser by the condenser fan. Liquid refrigerant is metered into the evaporator through capillary tubes to repeat the cycle.

1.5 Sequence of Operation - Heating Mode

1. On a call for heat, two stage thermostat contact(s) close, providing 24 VAC to “4” terminal on the ignition control.
2. Draft inducer is energized at high speed (B-W leads) at line voltage.
3. Air Pressure Switch (APS) closes, initiating 30 second prepurge.
4. At end of 30 second prepurge period, Spark & Gas Valve are energized for up to 5 second ignition trial. Gas valve will open in either low or high fire position, depending upon the heat requirements and contact closure in the thermostat.
5. Burners ignite and carryover.
6. Flame is detected by flame sensor and control operates in steady state heating position.
7. The two stage thermostat powers the low fire contact continuously on a call for heat and will close the high fire contact if necessary to meet heat requirements. Unit continues in operation in either low or high fire until the thermostat set point is reached.
8. Low fire contact in thermostat opens, interrupting power to “4” terminal on control and closing the gas valve.
9. The Draft inducer continues to run for a 60 second post purge period.
10. The control system is capable of three retrials if the above sequence is interrupted at any point.

    If the above sequence does not occur then:

11. If ignition is not achieved with in 5 seconds, the gas valve is shut off, the inducer keeps running for an inter purge period of 60 seconds and additional trials follow the specified sequence. If all 3 trials for ignition have occurred without proper ignition and flame detection, the control is locked out.
12. Control may be brought out of lock out by a. turning the thermostat to OFF for a minimum of 5 seconds and then ON, or b. turning the disconnect to OFF for a minimum of 5 seconds and then ON. Control will automatically also attempt another ignition sequence one hour after a lockout occurrence.
13. If flame is lost once it has been established, the control will shut off the gas supply within .8 seconds and enter the interpurge period. Control will initiate up to 3 additional trials per normal sequence of operation. (To restart, refer to item 12).
14. If flame sensor indicates presence of a flame during the purge period when no flame is present, the inducer will remain energized, but the gas valve will not be energized until the cause of the false flame is removed.
15. If the air pressure switch (APS) is closed when the inducer is energized or does not close after the inducer is energized, the control will wait one minute for the air switch to open or close and then lock out. (To restart, refer to item 12).
16. If the control detects power to the gas valve when the it should be off or no power when it should be on, the control will go into lockout with all outputs off. (To restart, refer to item 12).

The gas heat and air conditioner has a LED indicator that shows operating status and simplifies service by flashing fault codes.

On-Steady	Control Operation Normal
1 Flash	Open Air pressure switch, limit switch or flame rollout switch
2 Flashes	Pressure switch stuck closed
3 Flashes	Ignition/flame sensor failure
4 Flashes	Repeated flame loss
5 Flashes	Internal control fault
6 Flashes	Repeated pressure switch losses

LED Flash Code Key

1.6 Ventilation Options

Configuration "C": Up to 100% Modulating Economizer

The economizer reduces the cost of air conditioning by using outside air when acceptable to cool the room (Free Cooling). The factory installed Marvair® economizer has integral pressure relief.

Control Board Logic: Upon a "Call for Cooling", the economizer control board calculates whether the HVAC operates in economizer mode or mechanical cooling mode based on outdoor temperature (dry bulb) or temperature/humidity (enthalpy). When outdoor conditions are favorable for economizer cooling , the damper drives open and modulates to maintain a 55ºF mixed air temperature through the supply grille. When outdoor conditions are not favorable for economizer cooling, the economizer damper remains closed, and the HVAC unit will operate in mechanical cooling mode.

Features Designed for Telecommunication applications: Hydrogen Fault Input: When 24VAC is applied to the H_FLT input, the economizer board forces the damper to open 100% for emergency ventilation. The compressor does not operate during Hydrogen Fault/Emergency Ventilation. Thermostat must provide the fan "G" signal to HVAC to activate the indoor blower.

Forced Mechanical Cooling: When 24VAC is applied to the FC input of the economizer board, the economizer damper is forced closed, and the HVAC will operate in mechanical cooling mode. This is considered as economizer override in the event economizer cooling is not sufficient for the heat load. Thermostat must provide the fan "G" signal to HVAC to activate the indoor blower.

Economizer Status: The economizer board has contacts that when used with the Marvair CommStat 4 Telecom HVAC Controller, change state to provide feedback to the CommStat 4 to indicate when the HVAC is in economizer mode verses mechanical cooling mode. This feedback allows the CommStat 4 to initiate the forced cooling feature to override economizer cooling and force mechanical cooling.

When used with minimum position potentiometer (optional), the Marvair® economizer can meet requirements of ASHRAE Std. 62.

Configuration "D": Two-Position Motorized Fresh Air Damper w/Pressure Relief Ventilation

Control Board Logic: The 92589 control board allows the position of the "D" damper to be set for desired outside air intake from fully closed to fully open. Setting 15 of the control board configuration menu allows the user to set the position from 20 (2VDC / Closed) to 100 (10VDC 100% open). The damper position can be adjusted in 1VDC increments to any position from closed to 100% open as required.

Operation: Anytime the indoor blower operates, the damper drives open to the position selected in the control board configuration menu setting 15. When the indoor blower stops operation the motorized damper spring returns to the fully closed position.

Note: This circuit does not interrupt the compressor or heater operation.

Configuration "E": Two-Position Motorized Fresh Air Damper w/Pressure Relief Ventilation & Independent Control

Control Board/Factory Installed Relay Logic: The 92589 control board allows the position of the "E" damper to be set for desired outside air intake from fully closed to fully open. Setting 15 of the control board configuration menu allows the user to set the position from 20 (2VDC / Closed) to 100 (10VDC 100% open). The damper position can be adjusted in 1VDC increments to any position from closed to 100% open as required.

Operation: Upon a "Call for Motorized damper" via a 24V signal from an external user-installed device, the motorized damper opens to the position selected in the control board configuration menu setting 15 and the indoor blower operates. A 24VAC signal {sourced from LVTB 24VAC "R" and supplied through a user-provided Normally Open (NO) contact} activates (opens) the Motorized Damper and connected Relief Damper. When the 24VAC signal is removed, the motorized damper spring returns to the fully closed position and the indoor blower stops operation. The motorized damper Does NOT open when there is a call for the indoor fan (G).

Note: This circuit does not interrupt the compressor or heater operation.

Configuration "F": No Free Cooling, 100%- Damper Opening, Emergency Ventilation Only w/ Pressure Relief and Independent Control

Factory Installed Relay Logic: Upon a "Call for emergency ventilation", from an external user-provided device; the motorized damper opens to 100% open position and the indoor blower is forced to operate. During "Emergency Ventilation mode", the compressor and heater do not operate. The relay has a wire lead extended for the installer to connect their emergency ventilation control signal.

Note: This circuit interrupts the compressor and heater operation and forces the indoor blower and damper to operate during emergency ventilation mode.

Configuration "N": Manual Fresh Air Damper (Standard)

Barometric damper capable of up to 15% of the air conditioner's total rated airflow of outside air; field adjustable, no pressure relief.

1.7 Economizer Operation – Cooling Cycle *(Marvair GAA unit with Economizer only)*

The economizer is a regulated damper system with controls. The damper regulates the circulation of outside air into the enclosure (when the outdoor air conditions are suitable) to reduce the need for mechanical cooling, save energy, and extend compressor life.

Depending upon the options selected, the damper responds to either enthalpy or dry bulb temperature of the outdoor air. On a call for cooling from a space thermostat, it operates as follows:

When the enthalpy of the outdoor air is below the set point, the outdoor air damper is proportioned open (and return air damper is proportioned closed) to maintain between 50°F and 56°F at the mixed/discharge air sensor.

When the enthalpy of the outdoor air is above the set point, the outdoor air damper closes to its minimum position. A call for cooling from the space thermostat brings on mechanical cooling.

An optional built-in adjustable minimum position potentiometer, p/n 70012, controls the amount of outdoor air admitted to meet minimum ventilation requirements.

Chapter 2 Electronic Control Board

2.1 Introduction

⚠ WARNING

Failure to observe the instructions contained in this document may result in personal injury and/or property damage and may void the warranty. Read this manual before installing, replacing or using this product.

Eubank's proprietary Printed Circuit Board (PCB) sets the standard for the industry in flexibility, reliability and performance. This UL certified component is engineered to optimize Heating, Cooling and Dehumidification operation while communicating valuable information to the end user. Special features include 2-Stage operation with varying speed control to optimize latent and sensible capacity, built in remote communication (Modbus) for monitoring and/or control, optimized head pressure control and configurable menu options for various operations and control. The Eubank PCB comes equipped with seven segment display to annunciate faults, which drastically reduces troubleshooting time and system downtime. Lockout contacts are also provided along with the alarms being transferred via Modbus.

This chapter provides the necessary information for installing and operating the Eubank PCB. The diagram below identifies the inputs, outputs and connections for the Eubank PCB. *See I/O table*.

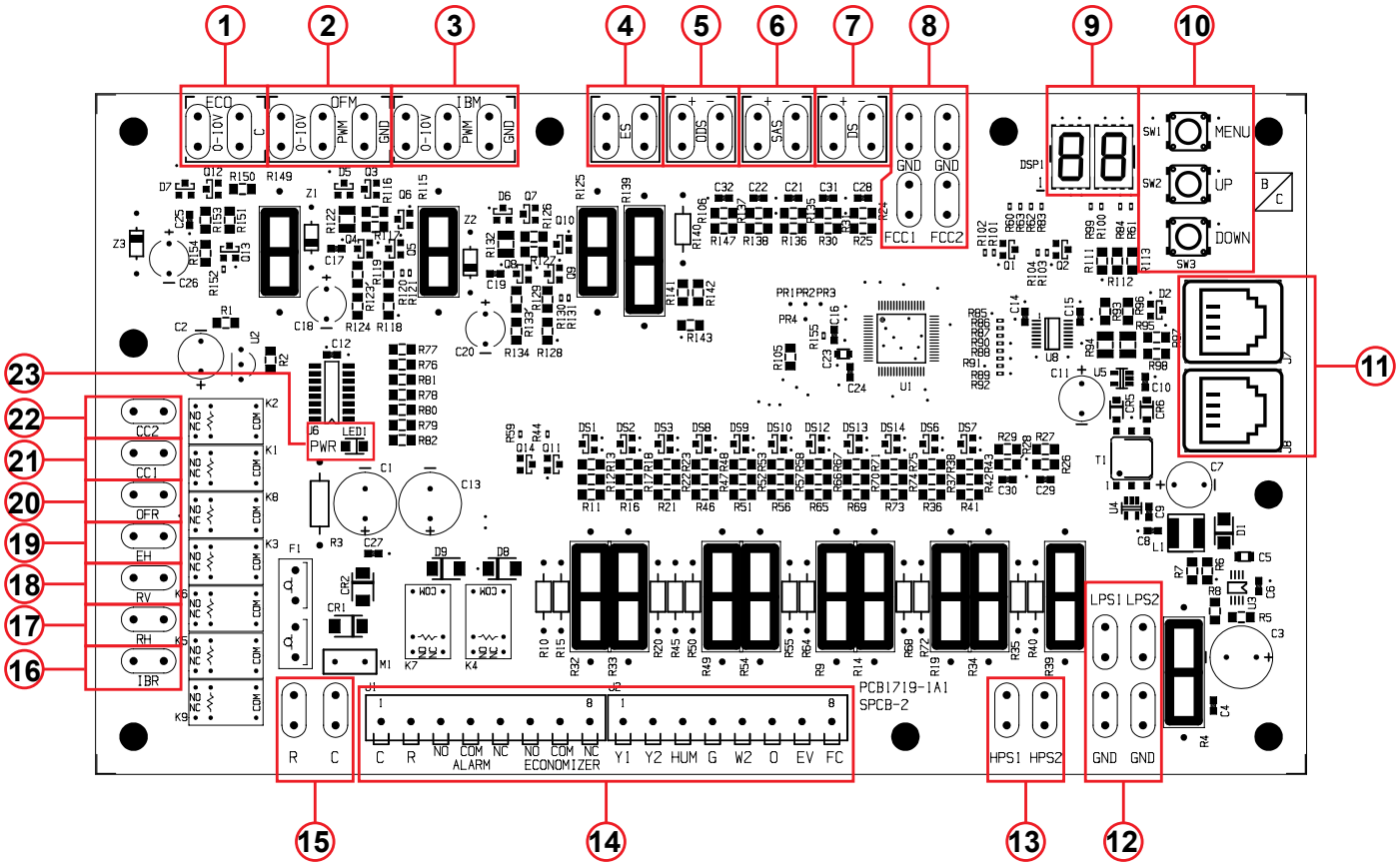

Item	Description
1	Economizer Actuator Output 2-10 VDC
2	Outdoor Motor Control Output 0-10 VDC or PWM
3	Indoor Motor Control Output 0-10 VDC or PWM
4	Enthalpy Sensor Signal Input 4-20mA
5	Outdoor Sensor Signal 10K NTC (Heat Pumps) / Dry Bulb Sensor Signal Input 10K NTC (Systems Equipped with Dry Bulb Economizer)
6	Supply Air Sensor Signal Input 10K NTC (Systems Equipped with Economizer)
7	Defrost Sensor Signal Input 10k NTC (Heat Pumps Only)
8	Head Pressure Control Sensor Signal 10k NTC (ECM Motors)
9	Control Board Menu/Fault Display
10	Menu/Up/Down Selection Buttons
11	Modbus RJ11 Communications Ports
12	Low Pressure / Freeze Sensor Signal Input 10k NTC
13	High Pressure Switch Input (Normally Closed)
14	Thermostat Inputs/Alarm And Status Terminals
15	24 VAC To Power Board (18 VAC To 30 VAC)
16	Indoor Blower Output 24 VAC (PSC Motors)
17	Reheat Output 24 VAC (Hot Gas Or Electric Reheat Dehumidification)
18	Reversing Valve Output 24 VAC (Heat Pumps Only)
19	Electric Heat Output 24 VAC
20	Outdoor Fan Output 24 VAC (PSC Motors)
21	Compressor 1/1st Stage Output 24 VAC (Single Stage Compressor)
22	Compressor 2/2nd Stage Output 24 VAC (Dual Compressor System 2nd Compressor) (Single Compressor 2nd Stage)
23	Control Board Power Indicator LED

2.2 Installation and Replacement

The PCB is factory installed. To install a replacement PCB, use the six mounting holes along with the appropriate screw size to firmly secure the board to the control box. After this is achieved, follow the wiring diagram and menu configuration for the respective system for appropriate operation. Ensure that the terminals used do not make any unwanted electrical connection (via strands etc.) with any other terminals. Please allow a 1” creepage distance between the board and all other adjacent electrical components.

2.3 PCB Details and Information

The PCB is equipped with an on board seven-segment display (Item #9) for configuring various settings and displaying faults. During normal operation the display remains off unless the configuration menu is accessed or a fault has occurred. Faults will be annunciated on the display as shown below:

Display	Displayed Faults
AS-F	Supply Air Sensor Fault (Sensor Disconnected Or Faulty) If Equipped
DB-F	Dry Bulb / Outdoor Sensor Fault (Sensor Disconnected Or Faulty) If Equipped
DS-F	Defrost Sensor Fault (Sensor Disconnected Or Faulty) Heat Pumps Only
ES-F	Enthalpy Sensor Fault (Sensor Disconnected Or Faulty) If Equipped
LP-1	Low Pressure Lockout Compressor Circuit 1
LP-2	Low Pressure Lockout Compressor Circuit 2
HP-1	High Pressure Lockout Compressor Circuit 1
HP-2	High Pressure Lockout Compressor Circuit 2
03	Low Voltage "Brownout" 16VAC or Less for 10 Minutes

2.3.1 – Programming Menu Configuration

1. To Enter Programming Mode:
   - Press and hold the *Menu* button for 5 seconds until **P-01** is displayed.
2. While in Programming Mode main menu:
   - Press the *Menu* button to enter the displayed parameter menu.
   - Press the Up/Down buttons to adjust the current parameter number.
   - The current parameter number will be displayed seven segments alternating showing "**P-**" and the number every 0.5s.
3. While in parameter menu:
   - The current parameter selection will be displayed seven segments.
   - Press the *Menu* button to save the current parameter selection return to the programming main menu.
   - Press the Up/Down buttons to adjust the current parameter selection.
4. To exit programming mode, press and hold the *Mode* and *Up* buttons while in the programming main menu.
   - Press and hold the *Menu* button for 5 seconds.
   - ***Note:*** The control will automatically exit the programming mode after 2 minutes with no activity.

Note: 100 will be displayed by alternating between "**1**" and "**00**" every 0.5s.

Configuration Menu				
Menu Setting	**Name**	**Default**	**Selections**	**General Description**
1	AC/HP Select	AC	AC, HP	HP = Heat Pump Unit, AC = AC Unit
2	IBM Select	P	P, dC	P = PWM, dC = 0-10V
3	FAN PURGE	90	N, 10-90	Indoor Blower off delay in seconds
4	IBM Y1 Set	80	40-100	“G” Fan only and “Y1” 1st Stage Cooling Indoor Blower Speed Setting
5	IBM Y2 Set	100	40-100	“Y2” 2nd Stage Cooling Indoor Blower Speed Setting
6	OFM Select	P	P, dC	P = PWM, dC = 0-10V
7	OFM Set	80	65-100	Outdoor Fan Motor Max Speed setting
8	Defrost Timer	30	30, 60, 90	Defrost cycle timer in minutes
9	EHDD select	Y	Y, n	CAN ONLY BE "Y" IF SCKT IS "N"
10	SCKT select	n	Y, n	SCKT= Y OVERRIDES EHDD
11	ODS set	50	0-70	Outdoor Sensor for HP or Econo. Dry Bulb Setpoint
12	ECONO select	n	Y, n	n = Disabled (No Econo.), Y = Enabled (W/Econo.)
13	Sensor Type	EN	EN or DB	Economizer sensor type selection EN= Enthalpy, DB = Dry Bulb
14	ECONO set	d	A-E	Selections A=73F, B=70F, C= 67F, D =63F E= 55F all @ 50%RH (Only available if EN sensor type is se-lected)
15	MIN POS	20	20-100	Sets the damper position for Minimum Open
16	W2 speed	100	70-100	Sets the Indoor Blower Speed for Electric Heat
17	Dehum speed	80	60-100	Sets the Indoor Blower Speed for Dehumidification
18	DS calibration	0	-18	Defrost Sensor Calibration
19	SAS calibration	0	-18	Supply Air Sensor Calibration
20	T'STAT Select	H	H, C	H = hardwired 24V Tstat, C = communicating Tstat
21	Modbus ID	1	36161	Sets the Modbus ID for the unit
22	Modbus BAUD rate	19	9.6, 19	Available Baud Rates 9.6 = 9600, 19 = 19200
23	Modbus timeout	25	21916	Communications Timeout in minutes
24	Test	n	Y, n	When set to “Y” all timers are reduced for testing
25	SW version number	N/A	N/A	Displays the current version software

Configuration Menu Details

1. **AC/HP Select:** This setting allows the PCB to be configured for AC (air-conditioner) or HP (heat-pump). The system type is configured at the factory during production testing for the appropriate system type. The default system type is AC.

2. **IBM Select:** This setting allows the IBM (Indoor Blower) control signal to be configured for PWM or 0-10vdc control. The default control output signal is PWM.

3. **Fan Purge:** This setting allows the delay off time of the indoor blower once the call for the indoor blower has been removed. The selections are N (no delay) or 10-90 seconds. After the default time of 90 seconds the indoor blower will shut off. Selecting the N (no delay) will allow the Indoor blower to shut off immediately after any request has been removed.

4. **IBM Y1 Set:** This is an independent setting for the speed at which the Indoor blower will operate upon a request for Y1 (1st stage cooling) via Digital Input or Modbus. The default setting for the IBM Y1 Set is 80% of maximum speed. The speed may be adjusted from 40-100% in 1% increments to meet desired airflow requirements. Note: Adjusting the speed too low will result in coil freezing.

5. **IBM Y2 Set:** This is an independent setting for the speed at which the Indoor blower will operate upon a request for Y2 (2nd stage cooling) via Digital Input or Modbus. The default setting for the IBM Y1 Set is 100% of maximum speed. The speed may be adjusted from 40-100% in 1% increments to meet desired airflow requirements.

   Note: Adjusting the speed too low will result in coil freezing, low-pressure or high-pressure lockout.

6. **OFM Select:** This setting allows the IBM (Indoor Blower) control signal to be configured for PWM or 0-10vdc control. The default control output signal is PWM.

7. **OFM Set:** This is an independent setting for the max speed at which the Outdoor fan will operate. The default setting for the OFM Set is 80% of maximum speed. The speed may be adjusted from 65-100% in 1% increments to meet desired airflow requirements.

   Note: Adjusting the speed too low will result in coil freezing, low-pressure or high-pressure lockout.

8. **Defrost Timer:** The defrost timer only applies to Heat-pump systems (when setting 1 is set to HP). This is the accumulation timer used to monitor for heat-pump defrost control. The selections for defrost timing is 30, 60 and 90 minutes. The defrost timer accumulates the compressor runtime in the heat-pump mode and monitors the defrost sensor for freezing conditions to initiate a defrost cycle at the selected defrost timing interval. The default defrost time is 30 minutes.

9. **EHDD Set:** The Electric heat during defrost setting allows the electric heat to operate when a defrost cycle is being performed in heat-pump mode. The selections for the EHDD Set are Y (yes) or N (no). When set to N (no) the electric heat will not operate automatically during a defrost cycle in heat-pump mode. When the EHDD Set is set to Y (yes, Default) the electric heat will operate upon each defrost cycle in the heat-pump mode.

   Note: EHDD and SCKT cannot both be set to the Y (yes) selection at the same time. SCKT takes priority over EHDD.

10. **SCKT Set:** The SCKT setting is used to prevent simultaneous operation of the electric heat and compressor. The selections for the SCKT Set are Y (yes) or N (no). When set to N (no, Default) the electric heat will be allowed to operate with the compressor in heat-pump mode upon a call

for W2 (auxiliary / emergency heat). When the SCKT Set is set to Y (yes) the electric heat will not be allowed to operate with the compressor in the heat-pump mode. When set to Y (yes) and upon a request for W2 (auxiliary / emergency heat) the compressor will shut off and the electric heat will operate.

Note: SCKT and EHDD cannot both be set to the Y (yes) selection at the same time. SCKT takes priority over EHDD.

11. **ODS Set:** The ODS Set is used to set the Outdoor Sensor temperature for Heat-pump systems. When the system type is configured for Heat-pump (when setting 1 is set to HP), the ODS Set allows the outdoor sensor to be used to govern when electric heat is allowed to operate. When the outdoor temperature is below the ODS setpoint, the electric heat will be allowed to operate. The adjustable range is 0F-70F in 1F increments with a default setpoint of 50F.

12. **ECONO Select:** The ECONO Select is used to select whether the system has an economizer system installed or not. When set to the Y (yes) selection the system will include the economizer cooling algorithm within its sequence of operation and utilize the economizer package when conditions are favorable for economizer cooling. When set to the N (no) selection the system will only utilize the compressor for cooling operation. This setting is configured at the factory during production testing for the appropriate system type.

    Note: When ECONO Set is set to Y (yes) the system must have an Enthalpy or Dry Bulb and Supply Air sensor connected and properly selected in setting 13 in order to operate in economizer cooling. The system will default to compressor cooling if any sensor becomes disconnected or faulty. Changing the ECONO Select to N (no) will disable economizer operation and the economizer function will be ignored.

13. **Sensor Type:** This setting is used for selecting the type of economizer sensor used EN (Enthalpy) or DB (Dry Bulb). The appropriate sensor must be connected and selected for economizer operation. This setting is configured at the factory during production testing for the appropriate sensor type.

14. **ECONO Set:** This setting is used to set the economizer setpoint at which the economizer is allowed to operate for cooling. When setting 13 is set for EN (Enthalpy), the selections are A= 73F, B=70F, C=67F, D=63F and E=55F all at 50% relative humidity. The A – E selections will only be available when setting 13 is set to EN (Enthalpy). When setting 13 is set for DB (Dry Bulb), the selection is from 20F to 105F in 1F increments. The 20F-105F range will only be available when setting 13 is set to DB (Dry Bulb).

15. **MIN POS:** The MIN POS setting is for setting the minimum position of the economizer or motorized damper. When set above 20 (2vdc) the damper will remain open to the selected position at all times, hence minimum position. The adjustable range is from 20 (2vdc) to 100 (10vdc) in 1vdc increments.

16. **W2 Speed:** This is an independent setting for the speed at which the Indoor blower will operate upon a request for W2 (Electric heat) via Digital Input or Modbus. The default setting for the W2 speed is 100% of maximum speed. The speed may be adjusted from 70-100% in 1% increments to meet desired airflow requirements.

    Note: Adjusting the speed too low will result in increased supply air temperatures in electric heat mode.

17. **Dehum Speed:** This is an independent setting for the speed at which the Indoor blower will operate upon a request for HUM (Dehumidification) via Digital Input or Modbus. The default setting for

the Dehum speed is 80% of maximum speed. The speed may be adjusted from 60-100% in 1% increments to meet desired airflow requirements.

18. **DS Calibration:** This setting is used to calibrate the defrost sensor from 0 to -18F.
19. **SAS Calibration:** This setting is used to calibrate the supply air sensor from 0 to -18F.
20. **T'STAT Select:** The thermostat type can be selected with this setting for an option of H= Hardwired 24vac Thermostat or C = Communicating Thermostat via Modbus. The default setting is H= Hardwired 24vac Thermostat.
21. **Modbus ID:** This setting allows the Modbus ID to be entered for Modbus communications for the unit. The range for the Modbus ID is 1 – 36161 the default Modbus ID is 1.
22. **Modbus Baud Rate:** This setting allows the Modbus Baud Rate to be entered for Modbus communications. The available Baud Rates are 9.6= 9600 and 19= 19200. The default Modbus Baud Rate is 19 = 19200.
23. **Modbus Timeout:** This is the setting for the Modbus communications timeout in minutes. The range of communications timeout is from 25 minutes to 21916 minutes. The default communications timeout is 25 minutes.
24. **Test:** The Test feature has two options Y= Yes or N= No. When this setting is set to Y=Yes, all circuit timers are reduced to expedite testing for various system operations. When set to N=No, all circuit timers are used in their default configuration and normal operation.
25. **Software Version Number:** The software version of the 92589-control board will be displayed on the seven-segment display. This is for informational purposes only.

2.4 Operation

Power

The Eubank PCB requires 24 VAC to operate. When the board is sufficiently powered, the "*PWR*" status light on the PCB illuminates "Green." When the power supply voltage is 16vac or less for 10 seconds the control board will de-energize all outputs. This is considered a voltage brownout (low voltage) condition and the display of the control board will show "03" as an indicator of brownout (low voltage). When the voltage rises back to 17 VAC, the control board will allow the system to operate.

Note: The nominal power supply for the control board is 24 VAC and this voltage should be confirmed during startup to assure normal operation.

Communication

The Eubank PCB comes equipped the Modbus communications standard. There are 2 adjacent RJ11 Modbus communication ports connected in parallel. That is, both ports transmit the same information. The board allows you to set the Baud Rate at 9600 bits per second or 19200 bits per second. The board also allows the Modbus ID to be selected in the configuration menu with the available range from 1 to 36161. The default Modbus ID is 1. *See section 2.1 for reference.*

2.5 Sequence of Operation

IMPORTANT
All equipment should go through the recommended commissioning/start up sequence to ensure safety and system reliability. This document is only valid if the system is used as intended.

This section defines the manner and method of control of the HVAC system. It will cover the following operations and protections.

1.0 Indoor Blower Operation

- 1.1 G - Indoor Blower Only
- 1.2 Y1 - Indoor Blower Operation
- 1.3 Y2 - Indoor Blower Operation
- 1.4 W2 – Indoor Blower Operation
- 1.5 HUM – Indoor Blower Operation

2.0 Cooling Operation AC / HP

- 2.1 Mechanical Cooling (AC systems)
  - 2.1.1 Partial Capacity
  - 2.1.2 Full Capacity
- 2.2 Mechanical Cooling (HP systems)
  - 2.2.1 Partial Capacity
  - 2.2.2 Full Capacity

3.0 Economizer Operation

- 3.1 Enthalpy Sensor and Operation
- 3.2 Dry Bulb Sensor and Operation
- 3.3 Supply Air Sensor
- 3.4 Minimum Position

4.0 Heating Operation AC / HP

- 4.1 Electric Heat (AC systems)
- 4.2 Heat Pump Heating Operation
- 4.3 Defrost Operation (Heat Pumps)
- 4.4 Electric Heat / Outdoor Sensor / SCKT / EHDD (Heat Pumps)

5.0 Dehumidification Operation AC / HP

- 5.1 Hot Gas Reheat
- 5.2 Electric Reheat

6.0 Refrigeration Protection

- 6.1 High Pressure lockout
- 6.2 Low Pressure Lockout / Freeze Protection
- 6.3 Anti Short Cycle

7.0 Additional Features

- 7.1 Modulating Head pressure Control (ECM Outdoor Motors)
- 7.2 Emergency Ventilation
- 7.3 Forced Cooling
- 7.4 Modbus Communications
- 7.5 Low Voltage (Brownout)

8.0 Smoke / Fire Shutdown

- 8.1 System Shutdown Contact Wiring

Note: Equipment, devices and necessary system components are specified in the respective section.
Note:

1. All inputs on the control board go through a 5 seconds Time-On Delay to prevent nuisance request. Compressor Outputs go through 5 seconds staggered Time On delay to prevent nuisance tripping of breaker due to the inrush associated with these large inductive loads.

2. Normal Operating Mode describes a mode in which there are no active faults which would interrupt the operation of the system.

1.0 Indoor Blower Operation

The speed at which the indoor blower will operate is based on the discrete operational inputs that have 24vac applied. These inputs are listed below.

1.1 G Input – A request for Fan Only (independent G-signal via Digital input or Modbus), results in the indoor motor turning "ON" and operating at the "Y2" (BY DEFAULT) motor speed (Only Applicable for EC motors).

1.2 Y1 Input – A request for Y1 (independent Y1-signal via Digital input or Modbus), results in the indoor motor turning "ON" and operating at the "Y1" motor speed (Only Applicable for EC motors).

1.3 Y2 Input – A request for Y2 (independent Y2-signal via Digital input or Modbus), results in the indoor motor turning "ON" and operating at the "Y2" motor speed (Only Applicable for EC motors).

1.4 W2 Input – A request for W2 (independent W2-signal via Digital input or Modbus), results in the indoor motor turning "ON" and operating at the "W2" motor speed (Only Applicable for EC motors).

1.5 HUM Input – A request for HUM (independent HUM-signal via Digital input or Modbus), results in the indoor motor turning "ON" and operating at the "HUM" motor speed (Only Applicable for EC motors).

When there is a request for Indoor Fan (G-input High) along with a request for cooling, heating or dehumidification, the G-Input becomes lowest priority. This means that in any combination involving the G-input, the speed associated to Fan Only will never take precedence.

The priority list from Highest to Lowest goes as follows:

1. Y2 - Request
2. Y1 - Request
3. W2 - Request
4. HUM - Request
5. G - Request

Note: The priority list above also describes the operation that takes precedence in the event that there is a request for all operations or a combination of operations. The controller will NOT energize the compressor outputs and the heater output simultaneously if configured for AC. The controller WILL energize the compressor outputs and the heater output simultaneously if configured for HP.

The speed at which the Indoor Fan Operates during Stage 1 (Y1) and Stage 2 (Y2) Cooling Request can be set directly at the board using the configuration menu settings 4 and 5. All requests are interlocked with the Indoor Fan and will run the Fan at the respective speed associated with the operation. This means that a lone call for Stage 1 (Y1) Cooling will automatically run the Indoor Fan at Stage 1 (Y1) Cooling Speed even without a request for Indoor Fan. This holds true for all request.

2.0 Cooling Operation

AC Systems Request	Active Input	Active Output
Stage 1 Cooling (Fixed Compressor)	Y1	CC1 (Partial Capacity)
Stage 1 Cooling (2 Fixed Compres-sors)	Y1 or Y2	CC1 or CC2 Respectively (Partial Capacity)
Stage 1 Cooling (1 Staged Compressor)	Y1	CC1 (Partial Capacity)
Stage 2 Cooling (2 Fixed Compres-sors)	Y1 + Y2	CC1 + CC2 (Full Capacity)
Stage 2 Cooling (2 Staged Compres-sors)	Y1 + Y2	CC1 + CC2 (Full Capacity)

2.1 Mechanical Cooling (AC systems) – This section will describe the sequence of operation which takes place during Direct Expansion (DX) cooling from a control standpoint.

Note: The system type must be configured for "AC" operation in setting 1 of the configuration menu of the control board for proper AC system operation. This system type is selected at the factory and there's no need to change this setting.

2.1.1 Y1 Cooling (Partial Capacity 1st Stage) – In normal operating mode, a request for "Stage1 Cooling" Y1-signal via Digital input or Modbus), energizes Compressor 1 Relay Output (CC1) on the PCB. The controller provides a continuous control signal associated to the Indoor Fan Motor, that is proportional to the "Y1" speed setting on the board or via Modbus. It also outputs a request dependent (based on FCC IN) control signal for the Outdoor Fan Motor (Only applicable to ECM motors). In Stage 1 Cooling operation, the compressor operates at partial capacity and the indoor fan remains on continuously but the outdoor fan modulates based on liquid line temperature. The Fan Cycle Control Sensor (Low Ambient Control Sensor) monitors the liquid line to maintain a 90F liquid line temperature. When the liquid line temperature is below 80F the outdoor fan will shut off. A liquid line temperature above 115F will force the outdoor fan to operate at the maximum speed set on the control board for setting 7 in the configuration menu. The outdoor fan will speed up and slow down between liquid line temperature of 80F and 115F. Systems with (PSC Outdoor Motors) utilizes a Fan Cycle Switch which closes at 400 PSIG to energize the OFR (outdoor fan relay) to start the outdoor fan which runs until the switch reopens (at 290 PSIG). These outputs function as described until the Cooling setpoint is satisfied. This is considered as ON/OFF fan cycle control and the PSC motor will not modulate.

Note: Single Stage compressors operate at full capacity upon a request for Y1.

2.1.2 Y1 and Y2 Cooling (Full Capacity 2nd Stage) – If the space temperature continues to increase pass the defined differential, Stage 2 Cooling (Y2-input) is energized. Under normal operation, this energizes the Compressor 2 Output (CC2). The Indoor Fan motor, will operate at "Y2" speed instead of "Y1" speed since Y2 has higher priority. These outputs remain energized until the cooling setpoint is satisfied. Once the setpoint is satisfied, the Compressor and the Outdoor fan outputs are de-energized. The Indoor motor continues to run based on the fan purge timer setpoint (default 90 seconds) selected in setting 3 of the configuration menu of the control board.

Note: 2 Stage compressors require a request for Y2 to operate at full capacity in Cooling operation. All Air-conditioners and Heat Pump systems with 2 stage compressors are allowed 2 stage cooling operation.

2.2 Mechanical Cooling (HP systems) – This section will describe the sequence of operation which takes place during Direct Expansion (DX) cooling from a control standpoint. The reversing valve (O Input) must be energized for Cooling operation on Heat Pump systems.

Note: The system type must be configured for "HP" operation in setting 1 of the configuration menu of the control board for proper HP system operation. This system type is selected at the factory and there's no need to change this setting.

2.2.1 Y1+ O Cooling (Partial Capacity 1st Stage) – In normal operating mode, a request for "Stage1 Cooling" Y1 + O signal via Digital input or Modbus), energizes the Reversing Valve Output (RV) and Compressor 1 Relay Output (CC1) on the PCB. The controller provides a continuous control signal associated to the Indoor Fan Motor, that is proportional

to the "Y1" speed setting on the board or via Modbus. It also outputs a request dependent (based on FCC IN) control signal for the Outdoor Fan Motor (Only applicable to ECM motors). In Stage 1 Cooling operation, the compressor operates at partial capacity and the indoor fan remains on continuously but the outdoor fan modulates based on liquid line temperature. The Fan Cycle Control Sensor (Low Ambient Control Sensor) monitors the liquid line to maintain a 90F liquid line temperature. When the liquid line temperature is below 80F the outdoor fan will shut off. A liquid line temperature above 115F will force the outdoor fan to operate at the maximum speed set on the control board for setting 7 in the configuration menu. The outdoor fan will speed up and slow down between liquid line temperature of 80F and 115F. Systems with (PSC Outdoor Motors) utilizes a Fan Cycle Switch which closes at 400 PSIG to energize the OFR (outdoor fan relay) to start the outdoor fan which runs until the switch reopens (at 290 PSIG). These outputs function as described until the Cooling setpoint is satisfied. This is considered as ON/OFF fan cycle control and the PSC motor will not modulate.
Note: Single Stage compressors operate at full capacity upon a request for Y1.

2.2.2 Y1 + Y2 + O Cooling (Full Capacity 2nd Stage) – If the space temperature continues to increase pass the defined differential, Stage 2 Cooling (Y1+Y2+O input) is energized. Under normal operation, this energizes the Compressor 2 Output (CC2). The Indoor Fan motor, will operate at "Y2" speed instead of "Y1" speed since Y2 has higher priority. These outputs remain energized until the cooling setpoint is satisfied. Once the setpoint is satisfied, the Compressor and the Outdoor fan outputs are de-energized. The Indoor motor continues to run based on the fan purge timer setpoint (default 90 seconds) selected in setting 3 of the configuration menu of the control board.

Note: 2 Stage compressors require a request for Y2 to operate at full capacity in Cooling operation. All Air-conditioners and Heat Pump systems with 2 stage compressors are allowed 2 stage cooling operation.
Note: With staged compressors, a CC2 output without a CC1 output will neither result in partial capacity nor full capacity. Only CC1 output can achieve partial capacity. Both CC1 and CC2 outputs are required to achieve full capacity.

3.0 Economizer Operation (If Equipped)

Damper Actuator

The damper actuator is a 24V motor that modulates the position of the damper blade. It is capable of driving a full 90 degrees within 90 seconds. The assembly has a spring return to close the damper during power outage.

3.1 Enthalpy Sensor and Operation – The enthalpy sensor responds to the total heat content of the outdoor air to provide the changeover to outside air for free cooling. The control board must be configured for proper operation of the economizer by selecting Y= Yes in the configuration menu setting 12. The sensor type must be selected in setting 13 for EN=Enthalpy. The desired changeover setpoint must be selected in setting 14 (default D=63F@50% rh). Example of Enthalpy Sensor and Enthalpy curve is shown below.

Note: Selecting N=No in configuration setting 12 will disable economizer operation.

⚠ DANGER

Sever hazard. The economizer contains moving parts capable of causing serious injury or death. Disconnect power before removing the covering panel.

Enthalpy Setpoint is Setting 14 in control board configuration menu.

Options
- **A=** 73ºF
- **B=** 70ºF
- **C=** 67ºF
- **D=** 63ºF
- **E=** 55ºF

All settings are @ 50%Rh

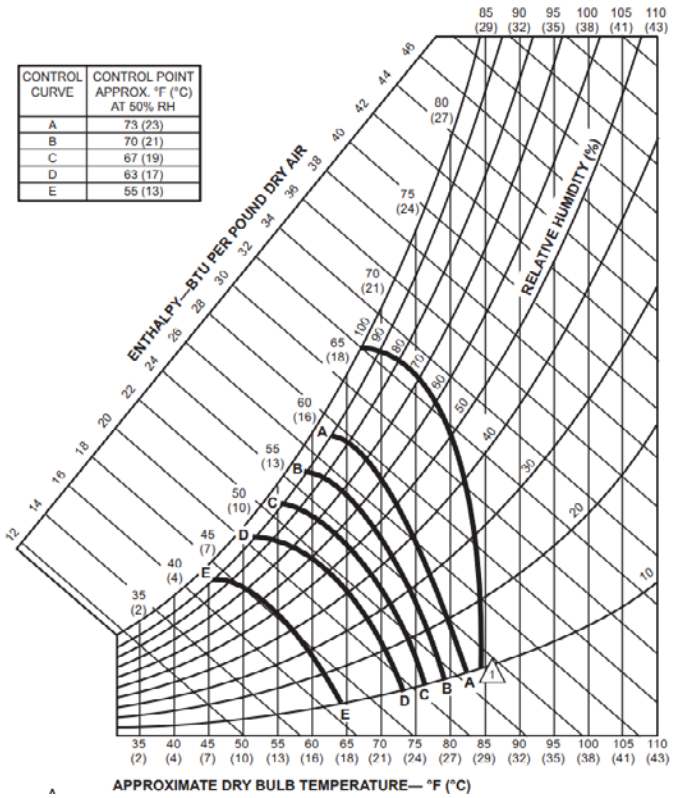

Figure 1. Enthalpy Sensor & Temperature Control Points

Enthalpy Operation

On a call for cooling from the wall-mounted thermostat, if outdoor conditions are suitable, the sensor will open the damper and admit outside air (i.e., economizer free cooling). If the outdoor ambient is too hot or humid (enthalpy sensor only), the sensor will place the actuator in the closed or minimum open position and activate mechanical cooling. The compressor is locked-out during the economizer cooling mode. The Supply Air sensor monitors the supply air of the system in economizer mode to modulate the economizer damper to maintain a 55F supply air temperature.

During the testing of the air conditioner at the factory, the control board has been configured for the sensor type used in the system. There should be no need to change the sensor configuration. If an enthalpy sensor is being used, setting 13 of the control board configuration menu will be set for EN= Enthalpy. A disconnected or faulty enthalpy sensor is annunciated on the control board display as “ES-F”. Economizer operation is only allowed in Cooling Mode.

Note: A call for Y2 or FC Inputs or a faulty or disconnected enthalpy sensor will override the economizer operation and force the compressor to operate.

3.2 Dry Bulb Sensor and Operation – The dry bulb sensor only responds to the dry bulb temperature of the outside air and ignores the humidity. The sensor is a 10K NTC sensor probe. The factory setting is 63°F. This setpoint can be adjusted in 1F increments from 20F to 105F in the control board configuration menu setting 14. Example of the dry bulb sensor is shown below.

Note: Selecting N=No in configuration setting 12 will disable economizer operation.

Figure 2. Dry Bulb Sensor

On a call for cooling from the wall-mounted thermostat, if outdoor conditions are suitable, the sensor will open the damper and admit outside air (i.e., economizer free cooling). If the outdoor ambient is too hot (dry bulb sensor only), the sensor will place the actuator in the closed or minimum open position and activate mechanical cooling. The compressor is locked-out during the economizer cooling mode. The Supply Air sensor monitors the supply air of the system in economizer mode to modulate the economizer damper to maintain a 55F supply air temperature.

During the testing of the air conditioner at the factory, the control board has been configured for the sensor type used in the system. There should be no need to change the sensor configuration. If a dry bulb sensor is being used, setting 13 of the control board configuration menu will be set for

DB=Dry Bulb. A disconnected or faulty dry bulb sensor is annunciated on the control board display as "db-F". Economizer operation is only allowed in Cooling Mode.

Note: A call for Y2 or FC Inputs or a faulty or disconnected dry bulb sensor will override the economizer operation and force the compressor to operate.

3.3 Supply Air Sensor – The supply air sensor is a 10K NTC sensor probe mounted on a bracket in the supply air opening of the system. The probe senses the air temperature entering the structure, and provides a signal to the economizer controller for modulating the position of the damper. The default supply air temperature is 55F in economizer cooling and is not adjustable. A disconnected or faulty supply air sensor is annunciated on the control board display as "AS-F".

Note: A faulty or disconnected supply air sensor will override the economizer operation and force the compressor to operate.

3.4 Minimum Position – The minimum position controls the amount of outside air introduced in the building when not in economizer operation or to meet a minimum outside air requirement to keep the damper open. This feature is only applicable to systems with economizer or ventilation damper options. The minimum position can be adjusted in the control board configuration menu with setting 15. The setpoint adjustments are from 20 (2vdc) to 100 (10vdc) in 1vdc increments. This is an independent adjustment and can be set to drive the ventilation damper open to any position from closed to fully opened. A selection of 20 (2vdc) is the same as being set to OFF or fully closed.

4.0 Heating Operation

4.1 Electric Heat (AC Systems with Electric Heat) – When there is a request for "Electric Heat" (W2-signal via Digital input or Modbus), the system will run the Indoor Motor for 10 seconds prior to energizing the Heater Output. The Indoor Motor will operate at the "W2" speed setting on the board or via Modbus. Once the Heater output is energized, the Heater comes on at full capacity (no staging). The Heater will remain on until the Heating setpoint is satisfied and the request is dropped. Once the heating setpoint is satisfied, the Indoor motor continues to run based

on the fan purge timer setpoint (default 90 seconds) selected in setting 3 of the configuration menu of the control board.
Note: A request for Cooling and Heating at the same time is not allowed and control board will not allow the electric heat to operate.

4.2 Heat Pump Heating Operation – This section will describe the sequence of operation which takes place during Direct Expansion (DX) heating from a control standpoint. The reversing valve (O Input) must NOT be energized for Heating operation on Heat Pump systems.
Note: The system type must be configured for "HP" operation in setting 1 of the configuration menu of the control board for proper HP system operation. This system type is selected at the factory and there's no need to change this setting.

In normal operating mode, a request for "Heat Pump Heating" Y1 signal via Digital input or Modbus), energizes the Compressor 1 and 2 Relay Output (CC1+CC2) on the PCB. The controller provides a continuous control signal associated to the Indoor Fan Motor, that is proportional to the "Y2" speed setting on the board or via Modbus. The system is defaulted to operate at Full capacity in heat pump heating mode. It also outputs a request for the Outdoor Fan to operate at the max speed. In heat pump Heating operation, the compressor operates at Full capacity and the indoor and outdoor fans remain on continuously. The outdoor fan does not modulate in heat pump heat mode.

4.3 Defrost Operation (Heat Pump Systems Only) – The board has an integral accumulation run timer that runs on every request for heat pump heating. The system has a Defrost Sensor (DS) that monitors the outdoor coil circuit for freezing conditions. If the defrost sensor registers a temperature of 32°F while in the heat pump heating mode, it will initiate a defrost cycle based on the time selected in the control board configuration menu setting 8. The defrost time intervals selections are 30, 60 and 90 minutes and the factory default setting is 30 minutes. If the defrost sensor is still calling for defrost at the end of this delay, it will de-energize the outdoor fan, energize the reversing valve through the RV terminal, and keep the compressor energized. The defrost cycle will terminate on time or temperature. It will have a maximum defrost run time of 10 minutes, however, if the defrost sensor registers a temperature of 70°F or higher before the 10-minute maximum run time, the defrost cycle will terminate. If the defrost cycle has not completed (DS sensor above 70F) due the heating call being satisfied, the defrost cycle will continue upon the next call for heat pump heating to complete the defrost cycle. If freezing conditions are not present at the end of the defrost interval timer, the system will not perform a defrost cycle.

Note: If the DS sensor is disconnected or faulty, the compressor will not operate in heat pump heating mode and the control board display will annunciate the fault as "DS-F".

Note: If "Yes" has been selected for Electric Heat During Defrost (EHDD) and "No" selected for the SCKT, the electric heat (EH) output will be energized during a defrost cycle to supply heat while the coil defrosts. *If the ODS is used, the electric heat will operate only if the outdoor temperature is below the ODS setpoint.*

4.4 Electric Heat / Outdoor Sensor / SCKT / EHDD (Heat Pumps) – *Electric Heat (HP systems with electric heat)*– When there is a request for "Electric Heat" (W2-signal via Digital input or Modbus), the system will run the Indoor Motor for 10 seconds prior to energizing the Heater Output. The Indoor Motor will operate at the "W2" speed setting on the board or via Modbus. Once the Heater output is energized, the Heater comes on at full capacity (no staging). The Heater will remain on until the Heating setpoint is satisfied and the request is dropped. Once

the heating setpoint is satisfied, the Indoor motor continues to run based on the fan purge timer setpoint (default 90 seconds) selected in setting 3 of the configuration menu of the control board.

When the system is operating in Heap Pump mode the electric heat is considered as supplemental heat and will only be allowed under certain conditions due to additional features that may be used. These features include the Outdoor Sensor and SCKT (safety circuit). See ODS and SCKT for more details.

ODS - Outdoor Sensor (Heat-Pumps Only)

The outdoor sensor only responds to the temperature of the outside air. The sensor is a 10K NTC sensor probe. The factory setting is 50°F. This setpoint can be adjusted in 1F increments from 0F to 70F in the control board configuration menu setting 11.

If the optional Outdoor Sensor is used (Heat-pump systems only). The electric heat will not operate upon a request for "W2" unless the outdoor temperature is below the setpoint for the ODS setpoint. If the sensor is not connected or faulty the electric heat will be allowed to operate anytime a request for W2 is present.
Note: A request for Cooling and Electric Heat at the same time is not allowed and the control board will not allow the electric heat to operate.

SCKT – Safety Circuit (Heat-Pumps Only)

The SCKT is a selectable menu option in the control board configuration menu setting 10. The options for this feature are Y=Yes or N=No. When set to Y=Yes, control board will prevent the compressor and electric heat from operating simultaneously. In this case the compressor will shut off upon a request for "W2" (Electric Heat). The compressor will remain off as long as the request for W2 is active. Once the request for W2 satisfies the compressor will be allowed to operate. The default setting for SCKT is N=No, the electric heat and compressor will be allowed simultaneous operation in the heat pump heating mode.
Note: If the ODS is used the electric heat will not operate unless the outdoor temperature is below the ODS setpoint.

EHDD – Electric Heat During Defrost (Heat-Pumps Only)

The EHDD is a selectable menu option in the control board configuration menu setting 9. The options for this feature are Y=Yes or N=No. When set to Y=Yes, control board will force the electric heat to operate during a defrost cycle unless SCKT is set to Y=Yes or the outdoor temperature is not below ODS (if equipped) setpoint. The default setting for EHDD is Y=Yes.

Note: SCKT takes priority over ODS and EHDD.

5.0 Dehumidification Operation AC / HP

5.1 Hot Gas Reheat (if equipped) – When there is a request for "Dehumidification" (HUM-signal via Digital input or Modbus), this will result in the control board energizing the Indoor Fan (IBR), Compressor 1 (CC1), Compressor 2 (CC2), Reversing Valve (RV) "heat pumps only" and the Reheat (RH) relay outputs on the board. This forces the system to operate in the full capacity cooling mode while energizing the reheat solenoid valve to allow hot gas to be introduced into the supply air stream of the system for dehumidification operation. The indoor fan motor will operate at the "Dehum" speed setting on the board or via Modbus. The indoor fan remains on continuously but the outdoor fan modulates based on liquid line temperature. The Fan Cycle Control Sensor (Low Ambient Control Sensor) monitors the liquid line to maintain a 90F liquid line temperature. When the liquid line temperature is below 80F the outdoor fan will shut off. A liquid line temperature above 115F will force the outdoor fan to operate at the maximum speed

set on the control board for setting 7 in the configuration menu. The outdoor fan will speed up and slow down between liquid line temperature of 80F and 115F. Systems with (PSC Outdoor Motors) utilizes a Fan Cycle Switch which closes at 400 PSIG to energize the OFR (outdoor fan relay) to start the outdoor fan which runs until the switch reopens (at 290 PSIG). These outputs function as described until the Dehumidification setpoint is satisfied. This is considered as ON/OFF fan cycle control and the PSC motor will not modulate.

Note: A request for Y1 or Y2 vis digital input or Modbus takes priority over dehumidification operation and the hot gas reheat valve will de-energize.

5.2 Electric Reheat (if equipped) – When there is a request for "Dehumidification" (HUM-signal via Digital input or Modbus), this will result in the control board energizing the Indoor Fan (IBR), Compressor 1 (CC1), Compressor 2 (CC2), Reversing Valve (RV) "heat pumps only" and the Reheat (RH) relay outputs on the board. This forces the system to operate in the full capacity cooling mode while energizing the electric heat to allow heat to be introduced into the supply air stream of the system for dehumidification operation. The indoor fan motor will operate at the "Dehum" speed setting on the board or via Modbus. The indoor fan remains on continuously but the outdoor fan modulates based on liquid line temperature. The Fan Cycle Control Sensor (Low Ambient Control Sensor) monitors the liquid line to maintain a 90F liquid line temperature. When the liquid line temperature is below 80F the outdoor fan will shut off. A liquid line temperature above 115F will force the outdoor fan to operate at the maximum speed set on the control board for setting 7 in the configuration menu. The outdoor fan will speed up and slow down between liquid line temperature of 80F and 115F. Systems with (PSC Outdoor Motors) utilizes a Fan Cycle Switch which closes at 400 PSIG to energize the OFR (outdoor fan relay) to start the outdoor fan which runs until the switch reopens (at 290 PSIG). These outputs function as described until the Dehumidification setpoint is satisfied. This is considered as ON/OFF fan cycle control and the PSC motor will not modulate.

Note: A request for Y1 or Y2 vis digital input or Modbus takes priority over dehumidification operation and the electric heat will de-energize.

6.0 Refrigeration Protection

6.1 High Pressure Lockout – This condition describes the abnormal rise in Head Pressure within system with an acceptable limit of 660 PSI (+/-20PSI). The fault will only be active when the High-Pressure Switch (Normally Closed) opens during a request for Cooling or Heat Pump Heating. The first time this fault condition occurs, the system cuts the compressor off WITHOUT locking out. Once the pressure normalizes (drops below 450 PSI), the system will resume operation if the cooling or heat pump heating call still exist. If this fault occurs a second time on the same Cooling or Heat pump heating request, the system locks out. Lockouts can be monitored using the control board display for the current fault. The fault for a high-pressure lockout will displayed as "HP-1" or "HP-2" followed by "F". The faults can also be monitored via Modbus by reading the respective value based on the Modbus map that is provided. After this lockout condition is reached, the cooling/heat pump heating call must be cycled (on/off of respective request) or the system must be power cycled to clear the fault. For a 2-compressor system, each lockout is isolated to the respective circuit and will not interfere with the operation of the other circuit providing that the circuits operate independently. The system will continue to lockout until the problem is rectified.

6.2 Low Pressure Lockout / Freeze Protection – A10K Nominal NTC Thermistor is connected to the "LPS 1" and "LPS2" inputs of the control board for circuit 1 and circuit 2 respectively.

The sensor is secured to the common suction line of the system to monitor the suction line temperature.

This condition describes the abnormal fall in Suction Line Temperature below 9ºF. This fault will only be active when the Low-Pressure Sensor detects suction line temperatures below 9ºF during a request for Cooling / Heat pump heating. The Low-Pressure Sensor is bypassed on the initial call for cooling for 3 minutes to allow low ambient start-up of the system. Once these 3 minutes have elapsed plus a 2-minute validation timer (5 minutes total), if the sensor remains below 9ºF, the system cuts the compressor off. The system will remain off for the defaulted 3-minute anti-short cycle time and then the system will restart the cooling / heat pump heating operation and the 3-minute bypass timer begins. Once these 3 minutes have elapsed plus a 2-minute validation timer (5 minutes total), if the sensor remains below 9ºF the system locks out. Lockouts can be monitored using the control board display for the current fault. The fault for a low-pressure lockout will displayed as "LP-1" or "LP-2" followed by "F". The faults can also be monitored via Modbus by reading the respective value based on the Modbus map that is provided. After this lockout condition is reached, the cooling/heat pump heating call must be cycled (on/off of respective request) or the system must be power cycled to clear the fault. For a 2-compressor system, each lockout is isolated to the respective circuit and will not interfere with the operation of the other circuit providing that the circuits operate independently. The system will continue to lockout until the problem is rectified.

6.3 Anti-Short Cycle – This is a built-in protection mechanism that increases the reliability of the compressor by protecting it from excessive short cycling. When the compressor goes off, due to any fault, emergency or if the cooling / heat pump heating setpoint is satisfied, a built-in 3-minute timer locks the compressor for that respective circuit out. This can be monitored by referencing the appropriate MODBUS read only variable. However, it can only be monitored at the board level by waiting for the 3 minutes to elapse.

7.0 Additional Features

7.1 Modulating Head Pressure Control (ECM Outdoor Motors) – A10K Nominal NTC Thermistor is connected to the "FCC1" and "FCC2" inputs for circuit 1 and circuit 2 respectively. The sensor is secured to the liquid line of the system to monitor the liquid line temperature. When this sensor is connected, the thermistor value is used as the process variable when controlling the head pressure. The controller modulates the Outdoor Fan Motor to maintain a 90ºF temperature setpoint. The controller will always use the greater value of FCC1 and FCC2 input as the reference point. In the event that the Thermistor is disconnected, the controller reverts to the outdoor fan operating at the max speed setting selected on the control board configuration menu setting 7.

Note: Systems with PSC outdoor motors utilize a fan cycle switch in the refrigeration circuit for on/off fan cycle head pressure control.

PSC Motor Head Pressure Control

The onboard outdoor fan relay (OFR) is used to control the Fan Cycle Switch based on CC output to the Compressor. Once the compressor out (CC1) is energized the OFR output will also be energized and the fan cycle switch will cycle on and off at 290psi and 400psi. This will turn the Outdoor Fan Motor on and off to maintain the head-pressure of the system, the OFR output is only used on systems with PSC out door motor and Fan Cycle Switch (FCC) only.

7.2 Emergency Ventilation (Motorized Damper or Economizer Equipped Systems) – When there is a request for "Emergency Ventilation" (EV-signal via Digital input or Modbus), the system will run the Indoor Motor at the "Y2" speed setting on the board or via Modbus and provide a

10vdc signal from the ECO output of the control board to drive the motorized damper fully open.

Note: The compressor and electric heat WILL NOT operate while in the emergency ventilation mode.

7.3 Forced Cooling (economizer equipped systems) – During economizer cooling, if a request for "Forced Cooling" (FC-signal via Digital input or Modbus) is present. The control board will force the economizer to close and start the compressor to operate at full capacity cooling. This is considered an override of the economizer in the event economizer cooling can't keep up with the cooling demand in economizer mode. The Indoor Motor at the "Y2" speed setting on the board or via Modbus and the system will operate in normal cooling mode until the request for FC is satisfied. Once satisfied the system will be allowed to return to economizer operation if conditions are favorable.

7.4 Low Voltage (Brownout) – The control board monitors the 24 VAC power supply for low voltage protection. When the power supply voltage is 16 VAC or less for 10 seconds the control board will de-energize all outputs. This is considered a voltage brownout (low voltage) condition and the display of the control board will show "03" as an indicator of brownout (low voltage). When the voltage rises back to 17 VAC, the control board will allow the system to operate.

Note: The nominal power supply for the control board is 24VAC and this voltage should be confirmed during startup to assure normal operation.

8.0 Smoke / Fire Shutdown

8.1 System Shutdown Contact Wiring – Add Normally Closed Dry contacts as shown for immediate shutdown of HVAC upon contacts opening.

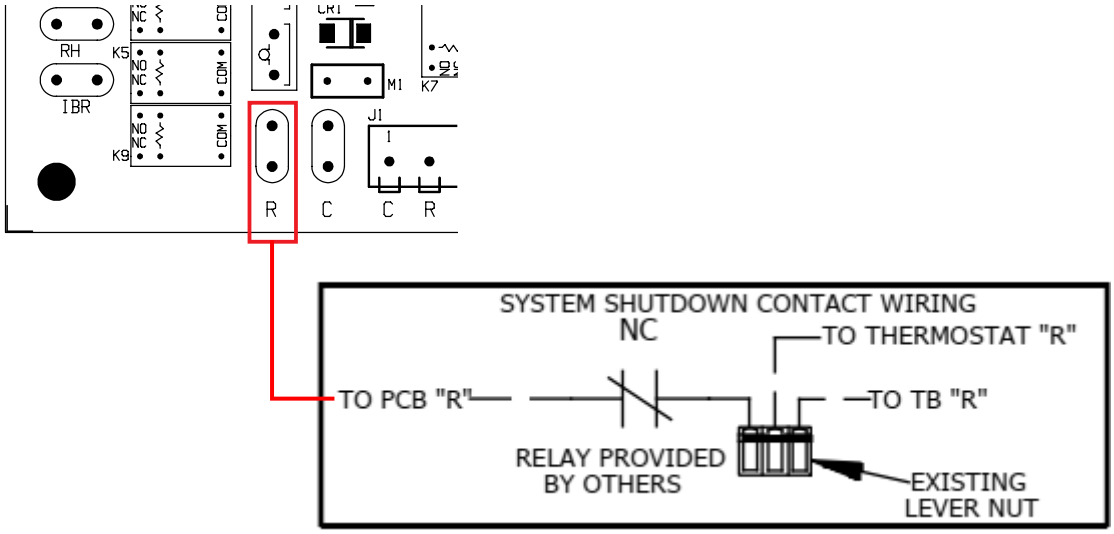

Chapter 3 Safe Installation Requirements

⚠ WARNING - SAFETY REQUIREMENTS

Improper adjustment, alteration, service, maintenance or installation could cause serious injury, death and/or property damage.

Installation or repairs made by unqualified persons could result in hazards to you and others. Installation MUST conform with local codes or, in the absence of local codes, with codes of all governmental authorities have jurisdiction.

The information contained in this manual is intended for use by a qualified service agency that is experienced in such work, is familiar with all precautions and safety procedures required in such work, and is equipped with the proper tools and test instruments.

⚠ AVERTISSEMENT
DANGER D'INCENDIE, EXPLOSION OU ASPHYXIE

Une mauvaise exécution d'installation, réglage, altération, intervention ou entretien peut causer dégâts matériels et dommages corporels ou même mort.

Une installation ou des réparations faites par des personnes non qualifiées peuvent entraîner des dangers pour vous et les autres. L'installation DOIT être faite en conformité avec les normes locales, ou en leur absence avec les normes des autorités nationales ayant juridiction en la matière.

Les informations contenues dans ce manuel sont prévues pour être utilisées par une agence de dépannage qualifiée, ayant de l'expérience dans ce type de travaux, familière avec les précautions et procédures de sécurité que cela implique, et équipée des outils et instruments de test adéquats.

⚠ WARNING - CARBON-MONOXIDE POISONING HAZARD

Failure to follow instructions could result in severe personal injury or death due to carbon-monoxide poisoning, if combustion products infiltrate into the building.

Check that all openings in the outside wall around the vent (and air intake) pipe(s) are sealed to prevent infiltration of combustion products into the building.

Check that furnace vent (and air intake) terminal(s) are not obstructed in any way during all seasons.

⚠ AVERTISSEMENT - RISQUE D'INTOXICATION AU MONOXYDE DE CARBONE

Si ces directives ne sont pas suivies, cela peut entraîner des blessures graves ou une intoxication au monoxyde de carbone pouvant causer la mort, si des produits de combustion s'infiltrent dans le bâtiment.

Vérifier que toutes les ouvertures pratiquées dans le mur extérieur autour du ou des tuyaux d'event (at de la prise d'air) sont scellées de manière à empêcher i'infiltration de produits de combustion dans le bâtiment.

Veiller à ce que la ou les sorties de l'évent de l'appareil de chauffage (et la prise d'air) ne soient, en aucune façon, obstruées, quelle que soit la saison.

NOTE: This furnace is design-certified by the CSA International (formerly AGA and CGA) for installation in the United States and Canada. Refer to the appropriate codes, along with this manual, for proper installation.

- Use only the Type of gas approved for this furnace (see Rating Plate on unit). Overfiring will result in failure of heat exchanger and cause dangerous operation. (Furnaces can be converted to LP gas with approved kit.)
- Install this furnace only in a location and position as specified in the Installation Requirements section of these instructions.
- Provide adequate combustion and ventilation air to the furnace as specified in Venting the Furnace section of these instructions. Vent this furnace only as specified in Venting the Furnace.

- Eubank HAA air conditioners with gas heat is only to be installed on the exterior of a building.
- Never test for gas leaks with an open flame. Use a commercially available soap solution made specifically for the detection of leaks to check all connections, as specified in Gas Supply and Piping, Final Check check of these instructions.
- Always install furnace to operate within the furnace's intended temperature rise range with a duct system which has an external static pressure within the allowable range, as specified in Porting and Ductwork section of these instructions and on the data plate.
- Supply ducts and the return air shall be handled by a duct(s) sealed to the furnace casing as specified in Porting and Ductwork.
- Seal around supply and return air ducts.
- Install correct filter type and size.

3.1 Safety Rules

Your unit is built to provide many years of safe and dependable service providing it is properly installed and maintained. However, abuse and/or improper use can shorten the life of the unit and create hazards for you, the owner.

A. The U.S. Consumer Product Safety Commission encourages installation of carbon monoxide alarms. There can be various sources of carbon monoxide in a building or dwelling. The sources could be gas- fired clothes dryers, gas cooking stoves, water heaters, furnaces, gas-fired fireplaces, wood fireplaces, and several other items.

   Carbon monoxide can cause serious bodily injury and/or death. Carbon monoxide or “CO” is a colorless and odorless gas produced when fuel is not burned completely or when the flame does not receive sufficient oxygen.

   Therefore, to help alert people of potentially dangerous carbon monoxide levels, you should have a commercially available carbon monoxide alarm that is listed by a nationally recognized testing agency in accordance with Underwriters Laboratores, Inc. Standard for Single and Multiple Station Carbon Monixide Alarms, ANSI/UL 2034 or the CSA 6.19-01 Residential Carbon Alarming Devices installed and maintained in the building or dwelling concurrently with the gas-fired furnace installation (see Note below). The alarm should be installed as recommended by the alarm manufacturer’s installation instructions.

B. There can be numerous sources of fire or smoke in a building or dwelling. Fire or smoke can cause serious bodily injury, death and/or property damage. Therefore, in order to alert people of potentially dangerous fire or smoke, you should have fire extinguisher and smoke alarms listed by Underwriters Laboratories installed and maintained in the building or dwelling (see note below).

   NOTE: Eubank does not test any alarms and makes no representations regarding any brand or type of alarms.

C. To ensure safe and efficient operation of your unit, you should do the following:

   1. **Thoroughly read this manual and labels on the unit.** This will help you understand how your unit operates and the hazards involved with gas and electricity.
   2. **Do not use this unit if any part has been under water.** Immediately call a quality service agency to inspect the unit and to replace any part of the control system and any gas control which has been under water.
   3. **Never obstruct the vent grilles, or any ducts that provide air to the unit.** Air must be provided for proper combustion and ventilation of flue gases.

⚠ WARNING: FROZEN AND BURST WATER PIPE HAZARD

Failure to protect against the risk of freezing could result in property damage and/or personal injury.
Do not leave the structure unattended for long periods during freezing weather without turning off water supply and draining water pipes or otherwise protecting against the risk of frozen pipes and resultant damage.

⚠ AVERTISSEMENT: DANGER DE GEL ET D'ÉCLATEMENT DES CONDUITES D'EAU

Le manque de protection contre le risque de gel peut entraîner des dégâts matériels et/ou des blessures corporelles.
Ne laissez pas la structure sans surveillance durant de longues périodes à la saison où il peut geler sans avoir auparavant coupé toutes les alimentations en eau et vidangé les conduites d'eau, ou bien protégez les conduites contre le gel et les dommages qui peuvent en résulter..

Your furnace is designed solely to provide a safe and comfortable living environment. The furnace is NOT designed to ensure that water pipes will not freeze. It is equipped with several safety devices that are designed to turn the furnace off and prevent it from restarting in the event of various potentially unsafe conditions.

If your furnace remains off for an extended time, the pipes in the structure could freeze and burst, resulting in serious water damage.

If the structure will be unattended during cold weather, you should take these precautions:

1. Turn off the water supply to the structure and drain the water lines if possible and add an antifreeze for potable water to drain traps and toilet tanks. Open faucets in appropriate areas.OR
2. Have someone check the structure frequently during cold weather to make sure it is warm enough to prevent pipes from freezing. Instruct them on a service agency to call to provide service if required.
3. Install a reliable remote sensing device that will notify somebody of freezing conditions within the structure.

D. Important Safety Precautions

⚠ WARNING

TURN ELECTRICAL POWER OFF AT THE breaker or fuse box BEFORE installing or working on the equipment. LINE VOLTAGES ARE HAZARDOUS or LETHAL.

⚠ AVERTISSEMENT

COUPEZ L'ALIMENTATION ÉLECTRIQUE, au niveau du disjoncteur ou du fusible en amont, AVANT l'installation de cet équipement ou une intervention dessus. LES TENSIONS D'ALIMENTATION SECTEUR SONT DANGEREUSES OU MORTELLES.

1. USE CARE when LIFTING or TRANSPORTING equipment.
2. TRANSPORT the UNIT UPRIGHT. Laying it down on its side may cause oil to leave the compressor or other problems, resulting in DAMAGE upon START-UP.
3. OBSERVE and COMPLY with ALL applicable PLUMBING, ELECTRICAL, and BUILDING CODES & ordinances.
4. SERVICE may be performed ONLY by QUALIFIED and EXPERIENCED PERSONS.
   - Wear safety goggles when servicing the refrigeration circuit
   - Beware of hot surfaces on refrigerant circuit components.
   - Beware of sharp edges on sheet metal components
   - Use care when reclaiming or adding refrigerant.
5. Use COMMON SENSE - BE SAFETY CONSCIOUS.

Chapter 4 Installation

⚠ WARNING
CARBON MONOXIDE POISONING HAZARD

Failure to properly vent this furnace or other appliances could result in death, personal injury and/or property damage.

If this furnace is replacing a previously common-vented furnace, it may be necessary to resize the existing vent system to prevent oversizing problems for the other remaining appliance(s). See *Venting the Furnace* **section of this instruction.**

⚠ AVERTISSEMENT
DANGER D'EMPOISONNEMENT AU MONOXYDE DE CARBONE

Un défaut de ventilation pour cette chaudière ou d'autres appareils peut causer la mort, des dommages corporels et/ou des dégâts matériels.

Si cette chaudière remplace une chaudière précédente à ventilation partagée, il pourra être nécessaire de redimensionner le système de ventilation existant pour éviter des problèmes de surdimensionnement au niveau du ou des autres appareils. Reportez-vous à la section *Ventilation de la chaudière* **dans ce manuel d'instructions.**

4.1 Location and Clearances

Choose the location or evaluate the existing location based upon the minimum clearance and furnace dimensions.

MODEL	Min. Clearance From the Front	Min. Clearance Around Both Sides	Min. Clearance Above the Unit	Min. Clearance Below the Unit	Min. Clearance Around the Flue Vent or Pipe
HAA1024/1030/1036	36"	19"	2"	0"	18"
HAA1042/1048/1060	36"	19"	2"	0"	18"

Table 1. Minimum Clearances from Unprotected Combustible Material and For Service

⚠ WARNING
CARBON MONOXIDE POISONING HAZARD

Failure to follow safety warnings could result in serious injury, death, or property damage.

Do NOT operate furnace in a corrosive atmosphere containing chlorine, flourine or any other damaging chemicals which could harm the furnace and vent system, and permit spillage of combustion products into an occupied space.

Refer to *Venting the Furnace* **section, contaminated combustion air for combustion air evaluation and remedy.**

⚠ AVERTISSEMENT
DANGER D'EMPOISONNEMENT AU MONOXYDE DE CARBONE

La non-observation des AVERTISSEMENTS de sécurité peut causer des blessures graves ou mortelles ou des dégâts matériels.

NE faites PAS fonctionner la chaudière dans une atmosphère corrosive contenant chlore, fluor ou tout produit chimique détériorant qui pourrait attaquer la chaudière et le système de ventilation, et permettre le déversement de produits de combustion dans un lieu habité.

Reportez-vous à la section *Ventilation de la chaudière,* **air de combustion contaminé, pour une évaluation de l'air de combustion et les remèdes s'il y a lieu.**

4.2 Installation Requirements

1. Install furnace level.
2. Install the vent pipes as short as practical. (See Venting the Furnace section).
3. Maintain clearance for fire safety and servicing. See Table 1 for minimum clearances.
4. Furnace must be located or physically protected from possible damage by a vehicle.
5. When the unit is installed on a new building, make sure that:
   a. The air temperature rise is within the rated rise range on the furnace rating plate, and the firing rate has been set to the rating plate value.
   b. The filters used to clean the circulating air during the construction process must be either changed or thoroughly cleaned prior to occupancy.
   c. The furnace, ductwork and filters are cleaned as necessary to remove drywall duct and construction debris from all HVAC system components after construction is completed.
   d. Verify proper furnace operating conditions including ignition, gas input rate, and venting according to these installation instructions.
6. The wall mounted air conditioner with gas heat furnace is designed to be installed on the EXTERIOR wall of a building. Do NOT install this unit in an interior space.
7. The unit is not certified or suitable for use in drying or process applications. Use in such applications voids any warranty and Eubank disclaims any responsibility for the duct furnace and/or application.
8. The unit is not designed for use in hazardous atmospheres containing flammable vapors or combustible dust, in atmospheres containing chlorinated or halogenated hydrocarbons, or in applications with airborne substances containing silicone.
9. The presence of chlorine vapors in the combustion air supply to gas fired heaters presents a substantial corrosion hazard.
10. The use and storage of gasoline or other flammable vapors and liquids in the vicinity of the unit is hazardous.
11. Install the unit so that the least amount of noise will be transmitted to the living spaces.
12. Condensate is produced during the cooling cycle. This condensate must be disposed of to a suitable location.
13. In the cooling mode, condenser air is drawn in through the sides of the unit and discharged through

the coil in the front of the unit. Both the intake and exhaust air must not be impeded or restricted by shrubbery or any other obstructions.

14. The power supply must have the appropriate voltage, phase and ampacity for the model selected. Refer to the data plate on the unit for ampacity requirements. Voltage must be maintained above minimum levels and below maximum levels shown below.

Electrical Rating Designations*	A	C	D
Nominal Voltage	208/230	208/230	460
Phase	1	3	3
Minimum Voltage	197	197	414
Maximum Voltage	253	253	506

*Letters refer to model number code designations. Refer to Model Identification on page 5.

Table 2. Electrical Rating Designations

15. Eubank HAA air conditioners with gas heat may be used for heating and cooling in buildings under construction provided that ALL installation procedures described in this manual are followed including, but not limited to:

    a. The unit must be properly vented,
    b. The unit must be controlled by a thermostat,
    c. The return air duct must be sealed to the unit,
    d. The air filters must be in place,
    e. The input rate and the temperature rise must be within the range shown on the data plate on the unit,
    f. The unit must be installed on the exterior of the building for providing outdoor air for combustion, and
    g. Return air temperature between 55°F (13°C) and 80°F (27°C)

    Upon the completion of the construction process, the unit, duct work and components must be cleaned and the proper operation of the furnace verified including ignition, input rate, temperature rise and venting as described in this manual.

4.3 Dimensional Data

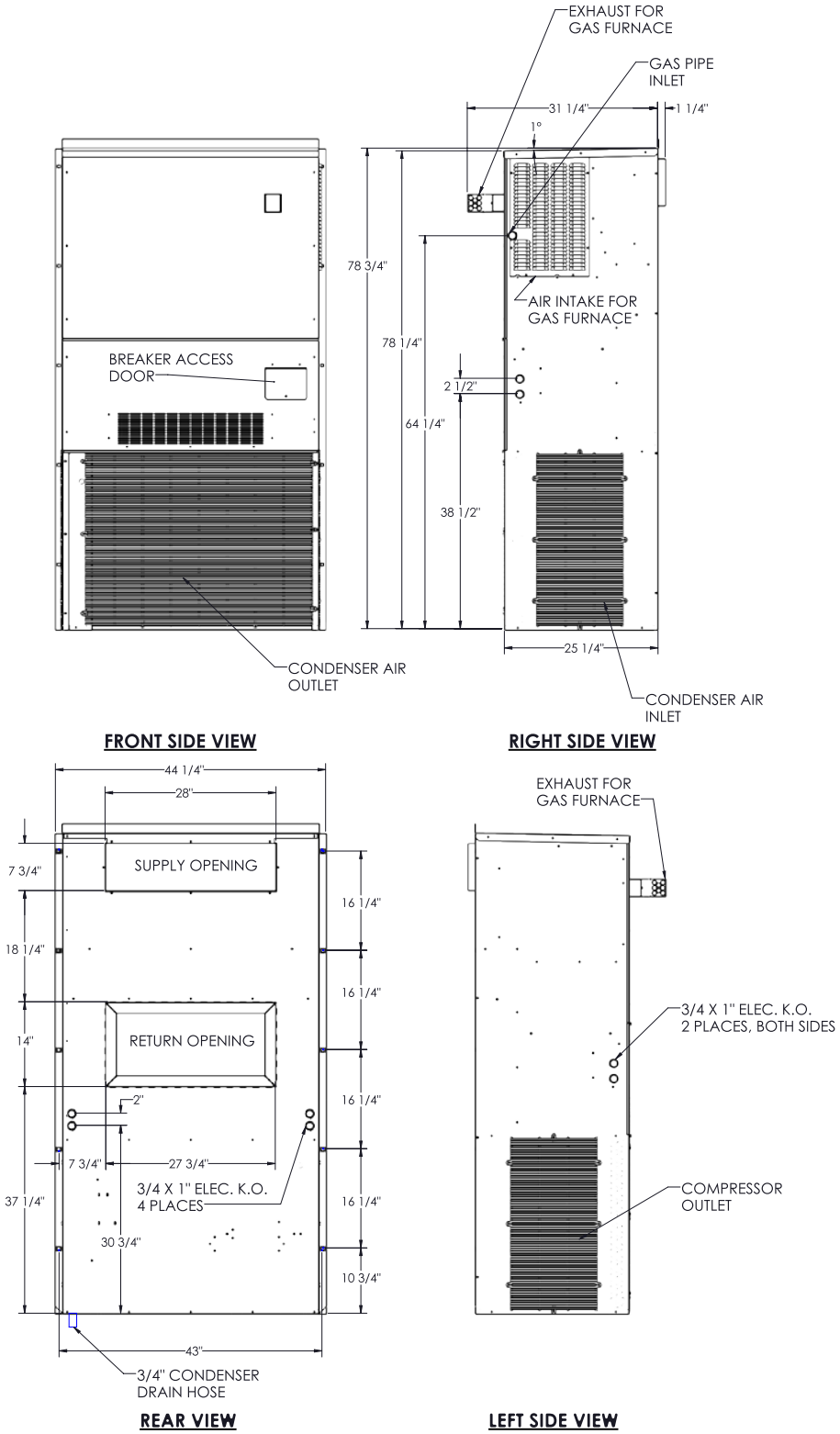

Shipping Weight

BASIC MODEL	HAA1024A	HAA1030A	HAA1036A
SHIP WEIGHT - LBS	335	415	415
SHIP WEIGHT - KG	152	189	189

Filter Size (inches)

BASIC MODEL	HAA1024A	HAA1030A	HAA1036A
FILTER SIZE - IN	30 x 16 x 2		
FILTER SIZE - MM	762 x 406 x 51		
FILTER PART #	80138		

Figure 3a. HAA1024A/HAA1030A/HAA1036A Dimensional Data

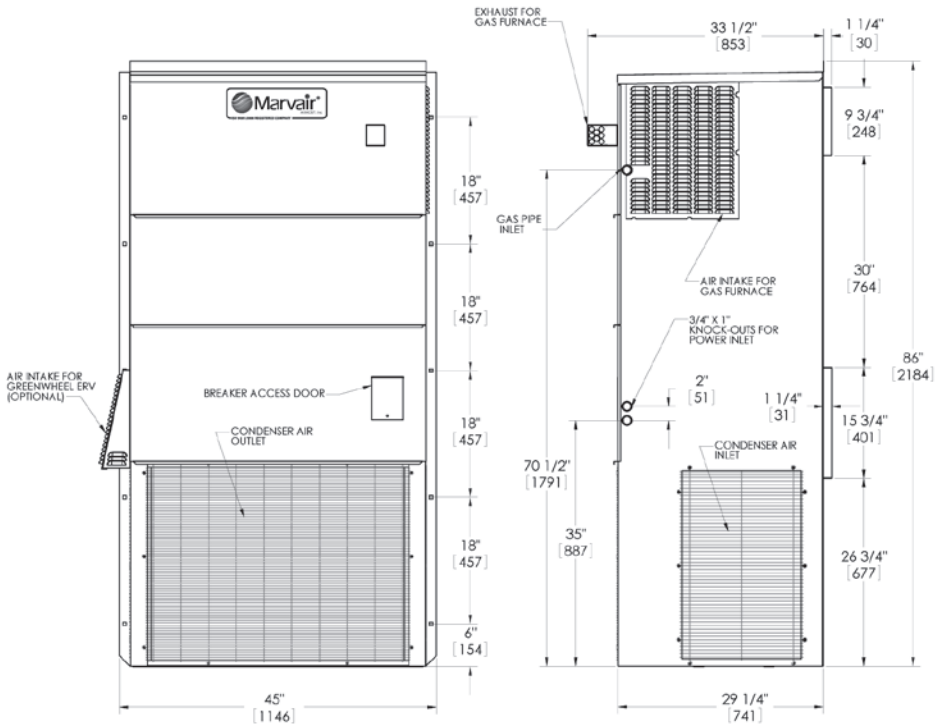

FRONT VIEW **RIGHT SIDE VIEW**

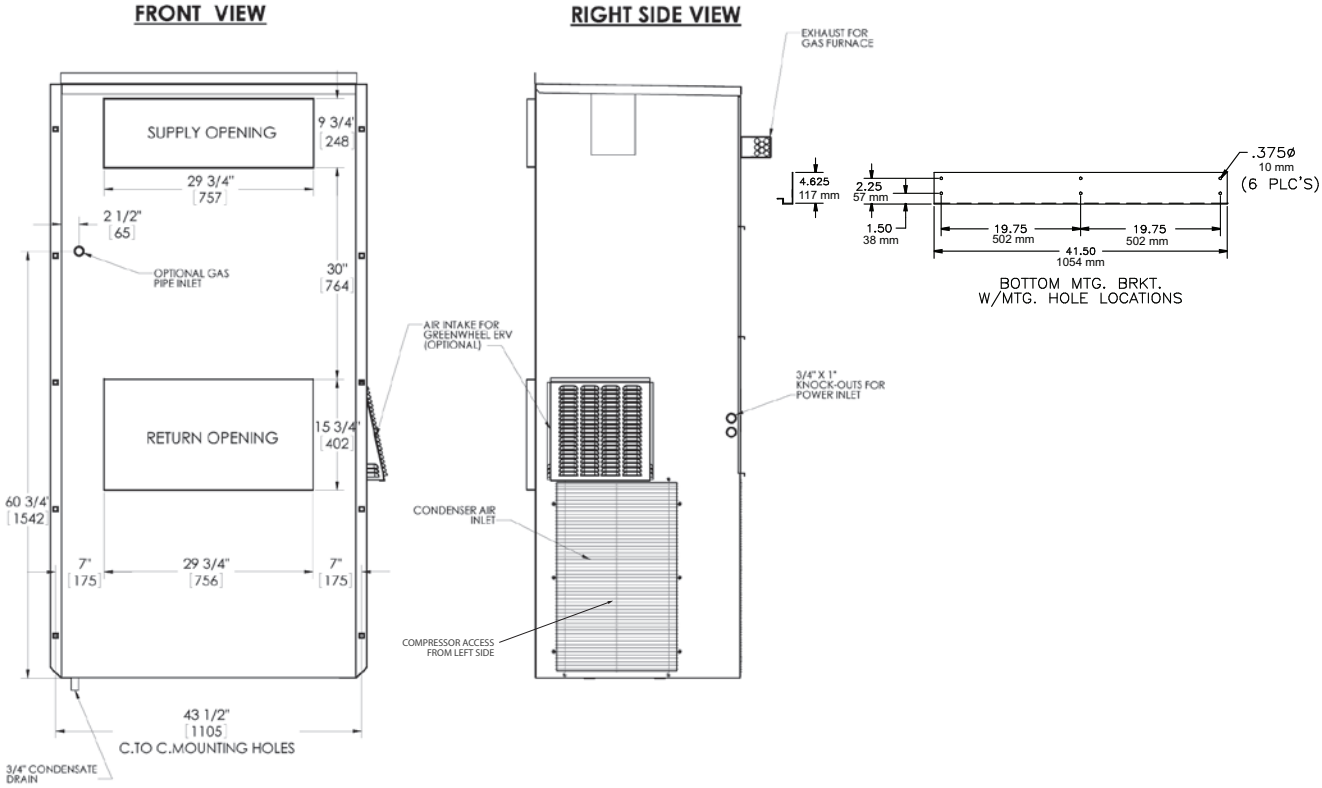

REAR VIEW **LEFT SIDE VIEW**

Shipping Weight

BASIC MODEL	HAA1042A	HAA1048A
SHIP WEIGHT - LBS	555	580
SHIP WEIGHT - KG	252	264

Filter Size (inches)

BASIC MODEL	HAA1042A	HAA1048A
FILTER SIZE - IN	18 x 24 x 1	
FILTER SIZE - MM	457 x 610 x 25	
FILTER PART # (2 FILTERS/UNIT)	81199	

Figure 3b. HAA1042A/HAA1048A Dimensional Data

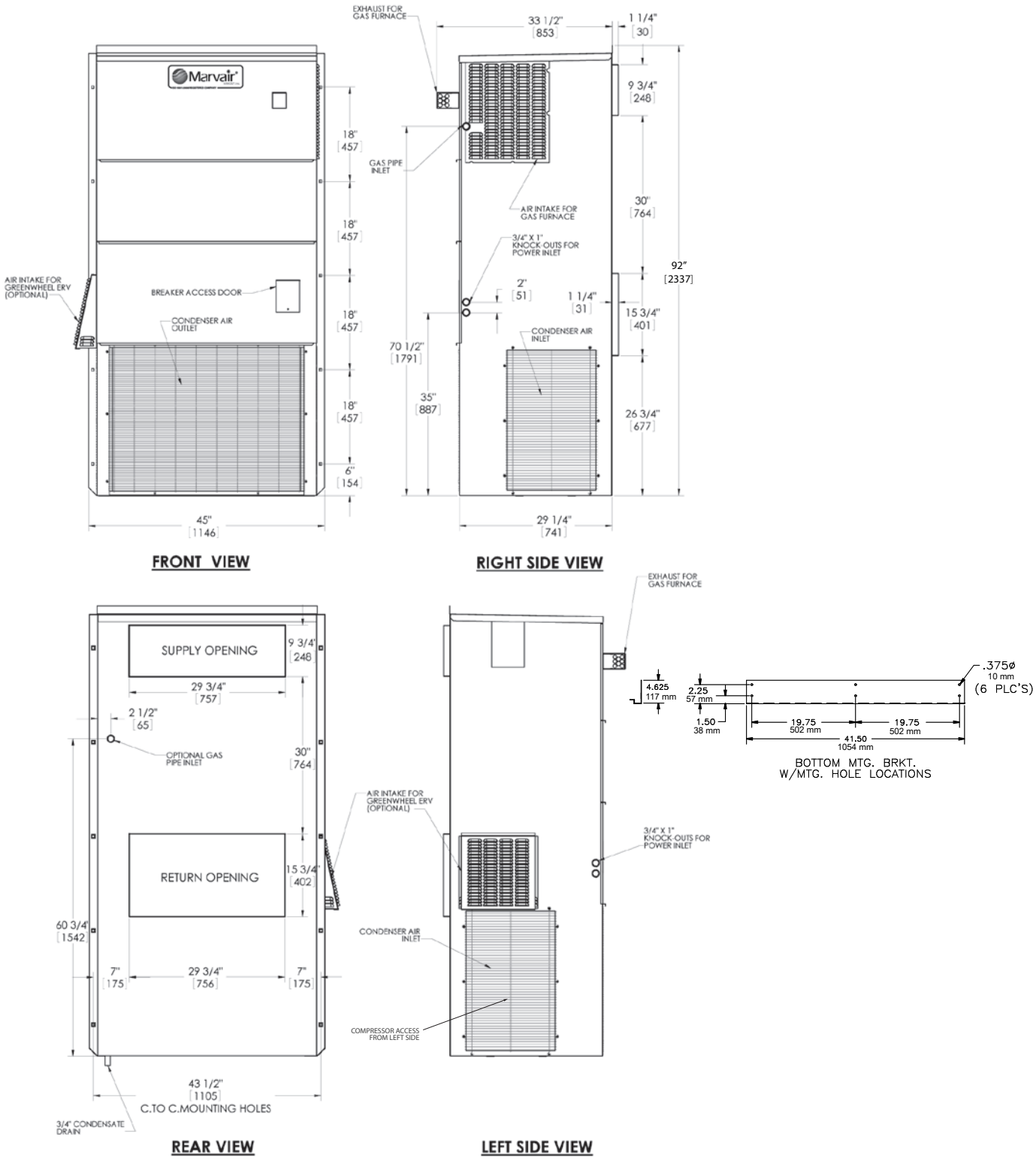

Shipping Weight

BASIC MODEL	HAA1042A	HAA1048A	HAA1060A
SHIP WEIGHT - LBS	555	580	595
SHIP WEIGHT - KG	252	264	270

Filter Size (inches)

BASIC MODEL	HAA1042A	HAA1048A	HAA1060A
FILTER SIZE - IN	18 x 24 x 1		
FILTER SIZE - MM	457 x 610 x 25		
FILTER PART # (2 FILTERS/UNIT)	81199		

Figure 3c. HAA1060A Dimensional Data

4.4 Equipment Inspection

Concealed Damage

Inspect all cartons and packages upon receipt for damage in transit. Remove cartons and check for concealed damage. Important: Keep the unit upright at all times. Remove access panels and examine component parts. (Note: The top (optional) and bottom brackets are stored in the condenser air compartment. Remove them before replacing the side screen). Inspect refrigerant circuit for fractures or breaks. The presence of refrigerant oil usually indicates a rupture. If damage is apparent, immediately file a claim with the freight carrier.

Units that have been turned on their sides or tops may have concealed damage to compressor motor mounts, to the oil system or to other components. If the unit is not upright, immediately file a claim for concealed damages and follow these steps:

1. Set unit upright and allow to stand for 24 hours with primary power turned on.
2. Attempt to start the compressor after 24 hours.
3. If the compressor will not start, makes excessive noise, or will not operate, return the unit to the freight carrier.

General

1. Inspect unit for completeness. Check for missing parts (e.g. hardware). Refer to the installation kit information in section 5.6, Installation Kits.
2. Remove access panels and check for loose wires. Tighten screw connections.
3. Complete and mail the warranty registration card.

4.5 Clearances

The sides and front of the unit must be kept free of any obstructions or anything that impedes or restricts the movement of intake or exhaust air. Follow local codes.

⚠ WARNING
CARBON MONOXIDE, FIRE OR EXPLOSION HAZARD

Failure to have the minimum clearances could result in severe personal injury or death.

⚠ AVERTISSEMENT
DANGER DE MONOXYDE DE CARBONE, D'INCENDIE OU D'EXPLOSION

Ne pas respecter les écartements minimum peut entraîner des blessures graves voire mortelles.

MODEL	Min. Clearance From the Front	Min. Clearance Around Both Sides	Min. Clearance Above the Unit	Min. Clearance Below the Unit	Min. Clearance Around the Flue Vent or Pipe
HAA1024/1030/1036	36"	19"	2"	0"	18"
HAA1042/1048/1060	36"	19"	2"	0"	18"

Table 3. Minimum Clearances from Unprotected Combustible Material and For Service

After the unit has been installed, make sure that the unit is level.

4.6 Installation Materials

Installation Kits

Eubank HAA air conditioners with gas heat have built-in mounting flanges that function as side brackets. All models require and are shipped with a bottom mounting bracket. There is also an air intake hood packed inside each unit and a vent hood.

Standard Kit Components

1. One 12 Ga. "L"-shaped bottom bracket

The package may include other factory-supplied items (optional) listed below and on the following page:

Part # Description

Thermostats

50121 Digital thermostat. 1 stage heat, 1 stage cool. Non-programmable. Fan switch: Auto & On. Manual changeover system switch: Cool-Off-Heat. Low temperature protection. °F or °C.

50123 Digital thermostat. 1 stageheat, 1 stagecool. 7 dayprogrammable. Fanswitch:Auto& On.Auto-change over. Keypad lockout. Non-volatile program memory. Title 24 compliant - no batteries needed.

50124 Digital thermostat. 1 stage heat, 1 stage cool. 7 day programmable. Fan switch: Auto & On. Manual changeover system switch. LCD display. Title 24 compliant - no batteriesneeded.

50100 Seven day programming. Two occupied and two unoccupied periods per day. Individual heat and cool setpoints. Manual or automatic changeover. System switch: Off, Cool, Heat, Emergency Heat. Fan Switch: Auto & On. Keypad lockout available. Ventilation terminals. No batteries required. Display indicates when Auxiliary Heat or Emergency Heat are activated. Requires a 50101 sub-base if used on a heat pump or a 50109 if used on an air conditioner.

70076 Internal Thermostat - Factory Installed 1 Stage Heat, 1 Stage Cool with Auto Changeover, Eliminates need for External Wall Mount T'Stat and Sub-Base.

50092 Thermostat Guard. For use with the 50107, 50122, 50121, 50123 and 50124.

Supply Grilles

80675 28 x 8" Adjustable, Aluminum, Double Deflection Supply Grille for HAA1024/1030/1036

80676 30 x 10" Adjustable, Aluminum, Double Deflection Supply Grille for HAA1042/10481060

Return Grilles

80678 28 x 14" Aluminum Return Grille for AHAA1024/1030/1036

80679 30 x 16" Aluminum Return Grille for HAA1042/1048/1060

Additional Items Needed:

Additional hardware and miscellaneous supplies (not furnished) are needed for installation. For example, the list below contains approximate quantities of items typically needed for mounting a unit on a wood frame wall structure with standard full length mounting bracket or flanges. Concrete or fiberglass structures have different requirements.

(10) **3/8" mounting bolts** or lag screws for side brackets and anchors, if required for side brackets.

(20) **3/8" washers**

(10) **3/8" hex nuts**

(6) **3/8" x 2-1/2" lag screws** for bottom bracket

- **Silicone Sealer** to seal around cracks and openings
- **7-conductor low voltage multi-colored wire cable** (i.e. thermostat wire)
- Appropriate electrical supplies such as conduit, electrical boxes, fittings, wire connectors, etc.
- **High voltage wire**, sized to handle the MCA (minimum circuit ampacity) listed on the data plate.
- **Over-Current Protection Device** sized in accordance with the MFS (maximum fuse size) listed on the unit data plate.

Duct materials usually are also needed in addition to the mounting hardware. To save time, design the duct work before mounting the unit.

4.7 Porting and Duct Work

⚠ WARNING
FIRE AND CARBON MONOXIDE POISONING HAZARD

Failure to properly install the duct work could result in death, bodily injury and/or property damage. In each installation, the duct system must be properly engineered and installed to insure sufficient air flow to prevent overheating. All units must have at least one inch clearance on all four sides of the supply outlet duct flange on the unit. The minimum one inch clearance must extend on all sides of the supply duct for the first three feet from the unit.

⚠ AVERTISSEMENT
DANGER D'INCENDIE ET D'EMPOISONNEMENT AU MONOXYDE DE CARBONE

Une installation incorrecte de la tuyauterie peut entraîner mort, blessure corporelle et/ou dégâts matériels. Sur chaque installation le système de conduites doit être bien calculé et installé, afin d'assurer un flux d'air suffisant évitant la surchauffe. Toutes les unités doivent avoir au moins 2,5 cm de dégagement sur les quatre côtés de la bride de sortie de conduite d'amenée sur l'unité. Ce minimum de 2,5 cm doit s'étendre de tous les côtés de la conduite d'arrivée sur ses premiers 90 cm en partant de l'unité.

4.8 General Information

NOTE: The following instructions are for general guidance only. Due to the wide variety of installation possibilities, specific instructions will not be given. When in doubt, follow standard and accepted installation practices, or contact Eubank for additional assistance.

4.9 Wall Openings

Measure the dimensions of the supply and return openings on the unit.

Cut the supply opening in the exterior wall for the supply and return. **IMPORTANT: All units must have at least one inch clearance on all four sides of the supply outlet duct flange on the unit. The one inch clearance must extend on all sides of the supply duct for the first three feet from the unit.** The duct must be constructed of galvanized steel with a minimum thickness of .019".

4.10 Minimum Airflow Requirements

The duct system must be engineered to assure sufficient air flow through the air conditioner with gas heat, even under adverse conditions such as dirty filters, etc. Proper engineering will insure longevity and maximum performance from the unit.

4.11 Ducting

Extensions should be cut flush with the inside wall for applications without duct work.

Applications using duct work should be designed and installed in accordance with *all* applicable safety codes and standards. Eubank strongly recommends referring to the current edition of the National Fire Protection Association Standards 90 A and 90 B *before* designing and installing ductwork. The ductsystem must be engineered to insure sufficient air flow through the unit to prevent over-heating. This includes proper supply duct sizing, sufficient quantity of supply registers, adequate return and filter area. Ductwork must be of correct material and must be properly insulated. Ductwork must be constructed of galvanized steel with a minimum thickness of

.019". Ductwork must be firmly attached, secured and sealed to prevent air leakage. Do not use duct liner on inside of supply duct within four feet of the unit.

Galvanized metal duct extensions should be used to simplify connections to duct work and grilles. Use fabric boots to prevent the transmission of vibration through the duct system. The fabric must be U.L. rated (UL-181) to a minimum of 197°F.

Note: Follow local codes and standards when designing duct runs to deliver the required airflow. Minimize noise and excessive pressure drops caused by duct aspect ratio changes, bends, dampers and outlet grilles in duct runs.

4.12 Hanging the Unit on the Wall

1. Remove and discard the 4 x 4 shipping boards attached to the base of the unit.
2. All HAA models have built-in mounting flanges. See Figure 2.
3. Refer to Figure 2. Attach the bottom support bracket to the wall using appropriate 3/8" diameter hardware.

For example, on wooden structures, use 3/8 x 2-1/2 inch all-thread lag screws. The screws must penetrate the center of the wall stud. Drill a pilot hole in the stud to prevent it from splitting.

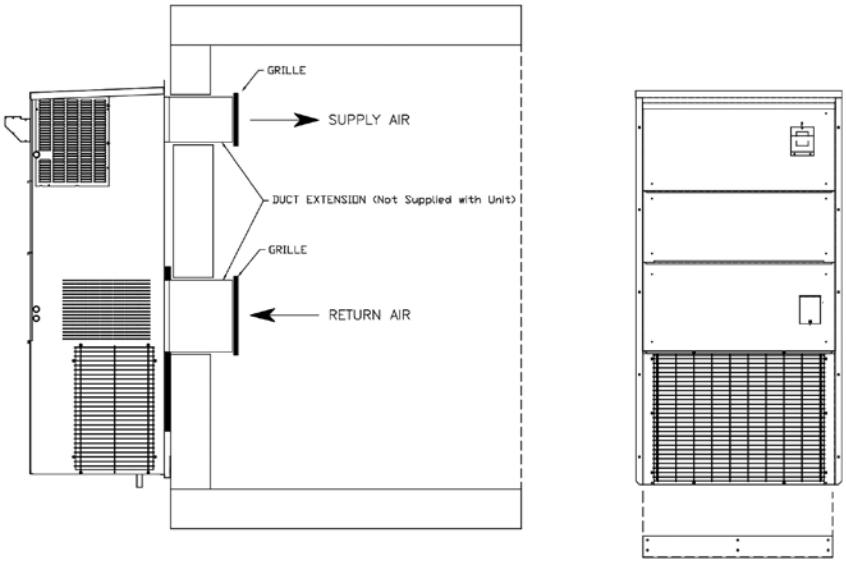

Figure 4. Mounting Unit on a Wall

4. For wiring into the back of unit, locate the lower of the two knock-outs on the wall side of the unit. Drill a one inch hole in the building wall to match this opening. Allow sufficient clearance to run 3/4" conduit through the hole and to the unit.
5. Apply a bead of silicone sealer on the wall side of the mounting brackets. Circle the mounting

holes with the silicone bead.

6. Using an appropriate and safe lifting device, set the unit on the bottom support bracket mounted on the wall. You must stabilize the unit on the bracket with the lifting device or by some other means - the bracket alone is not sufficient.
7. Make sure that the duct flanges are properly aligned with the wall opening. Adjust as necessary.
8. Note the holes in each side bracket. Using the holes for guides, drill holes through the wall with a 3/8 inch drill bit. Insert the 3/8" bolts or lag screws through the brackets. Tighten the bolts to secure the unit.
9. Apply a bead of silicone where the top flange and side brackets contact to the structure wall.
10. Fasten the top flange to the wall using #10 x 1/2 inch sheet metal screws.
11. On the inside of the structure, wall sleeves must be installed in the supply and return air openings. The sleeves should be trimmed to fit flush with the inside wall.
12. Check the fit of each sleeve to its mating flange for possible air leaks. Apply silicone sealer to close any gaps. Install the air return and supply grilles.

4.13 Gas Supply and Piping

⚠ WARNING
CARBON MONOXIDE, FIRE AND EXPLOSION HAZARD

Failure to follow safety warnings exactly could result in serious injury, death and/or property damage.

Models designated for Natural Gas are to be used with Natural Gas ONLY, unless properly converted to use with LP gas.

⚠ AVERTISSEMENT
DANGER DE MONOXYDE DE CARBONE, D'INCENDIE OU D'EXPLOSION

Ne pas respecter exactement les AVERTISSEMENS de sécurité peut causer des dommages corporels graves ou mortels et/ou des dégâts matériels.

Les modèles conçus pour du gaz naturel ne doivent fonctionner qu'avec ce gaz UNIQUEMENT, sauf s'ils ont été convertis dans les règles pour utiliser du gaz propane (LP).

4.14 Gas Supply Requirements

- Use only the type of gas approved for this furnace. See rating plate for approved gas type.
- Gas input must not exceed the rated input shown on the rating plate. Overfiring will result in failure of heat exchanger and cause dangerous operation.
- Do not allow minimum supply pressure to vary downward. Doing so will decrease input to furnace. Refer to Table 4 for gas supply pressure. Refer to Section 6.2 Gas Manifold Pressure Adjustments.

Gas Type	Supply Pressure		
	Recommended	Max.	Min.
Natural	7"	14"	4.5"
Propane	11"	14"	11"

Table 4. Gas Pressures

4.15 Gas Piping Requirements

NOTE: The gas supply line must be installed by a qualified service technician in accordance with all building codes.

NOTE: In the state of Massachusetts.

a. Gas supply connections MUST be performed by a licensed plumber or gas fitter.

b. When flexible connectors are used, the maximum length shall not exceed 36” (915 mm).

c. When lever handle type manual equipment shutoff valves are used, they shall be T-handle valves.

1. Install gas piping in accordance with local codes, or in the absence of local codes, the applicable national codes.
2. It is recommended that a manual equipment shutoff valve be installed in the gas supply line outside the furnace. Locate valve as close to the furnace as possible where it is readily accessible.

⚠ WARNING
FIRE HAZARD

Failure to follow safety warnings exactly could result in serious injury, death and/or property damage.

Use wrench to hold furnace gas control valve when turning elbows and gas line to prevent damage to the gas control valve and furnace.

⚠ AVERTISSEMENT
DANGER D’INCENDIE

Ne pas respecter exactement les AVERTISSEMENTS de sécurité peut causer des dommages corporels graves ou mortels et/ou des dégâts matériels.

Utilisez une clé pour maintenir la vanne de contrôle de gaz de la chaudière quand vous tournez coudes ou conduite de gaz, afin d’éviter d’endommager la vanne et la chaudière.

3. Use black iron or steel pipe and fittings or other pipe approved by local code.
4. Use pipe thread compound which is resistant to natural and LP gases.
5. Use ground joint unions and install a drip leg no less than 3” long to trap dirt and moisture before it can enter gas control valve inside furnace.
6. Provide a 1/8” NPT plugged tapping for test gauge connection immediately up stream of gas supply connection to furnace.
7. Use two pipe wrenches when making connections to prevent furnace gas control valve from turning.

NOTE: If local codes allow the use of a flexible gas appliance connector, always use a new listed connector. Do not use a connector which has previously serviced another gas appliance.

8. Flexible corrugated metal gas connector may NOT be used inside the furnace or be secured or supported by the furnace or ductwork.
9. Properly size gas pipe to handle combined appliance load or run gas pipe directly from gas meter or LP gas regulator.
10. Install correct pipe size for run lenght and furnace rating.
11. Measure pipe length from gas meter or LP second stage regulator to determine gas pipe size.

⚠ WARNING
FIRE OR EXPLOSION HAZARD

Failure to properly install metal gas connector could result in death, bodily injury and/or property damage.

A flexible corrugated metal gas connector must be properly installed, shall not extend through the side of the furnace, and shall not be used inside the furnace.

Black iron pipe shall be installed at the furnace gas control valve and extend a minimum of 2" outside furnace.

⚠ AVERTISSEMENT
DANGER D'INCENDIE OU D'EXPLOSION

Ne pas installer correctement le connecteur métallique du gaz peut causer des dommages corporels graves ou mortels et/ou des dégâts matériels.

Un connecteur métallique de gaz flexible ondulé doit être correctement installé, ne doit pas dépasser du côté de la chaudière, et ne doit pas être utilisé à l'intérieur de la chaudière.

Un tuyau en fer noir doit être installé sur la vanne de contrôle du gaz de chaudière et dépasser d'au moins 5 cm hors de la chaudière.

Additional LP Piping Requirements

- Have a licensed LP gas dealer make all connections at storage tank and check all connections from tank to furnace.
- If copper tubing is used, it MUST comply with limitation set in local codes, or in the absence of local codes, the gas codes of the country having jurisdiction.
- Two-stage regulation of LP gas is recommended.

⚠ WARNING
FIRE OR EXPLOSION HAZARD

A natural gas or LP gas leak ignited by an open flame or spark could result in death, personal injury and/or property damage.

Natural gas is lighter than air and will rise. Liquidified petroleum (LP) gas is heavier than air and will settle and remain in low areas and open depressions.

Thoroughly ventilate area and dissipate gas. DO NOT use a match or open flame to test for leaks, or attempt to start up furnace before thoroughly ventilating area. Use a commercially available soap solution made specifically for the detection of leaks to check all connections. A fire or explosion may result causing property damage or loss of life.

⚠ AVERTISSEMENT
DANGER D'INCENDIE OU D'EXPLOSION

Une fuite de gaz naturel ou propane allumée par une flamme nue ou une étincelle peut causer des dommages corporels graves ou mortels et/ou des dégâts matériels.

Le gaz naturel est plus léger que l'air et va monter. Le gaz propane (pétrole liquéfié) est plus lourd que l'air et va descendre et s'accumuler dans les zones basses et les dépressions ouvertes.

Ventilez complètement la zone. N'utilisez PAS d'allumette ou de flamme nue pour chercher des fuites, et n'essayez pas de démarrer la chaudière avant d'avoir bien ventilé la zone.

Utilisez une solution savonneuse disponible dans le commerce faites spécialement pour vérifier l'absence de fuite à tous les raccordements. Une fuite peut causer incendie ou explosion, avec dégâts matériels et blessures mortelles.

Final Check of Gas Piping

- Test all pipes for leaks.
- If orifices were changed, make sure they are checked for leaks.
- During pressure testing of gas supply piping system:
  a. If test pressure does not exceed 1/2" psi, isolate the furnace from the gas supply piping system by closing the equipment shutoff valve.
  b. If test pressure exceed 1/2" psi, the furnace and its manual equipment shutoff valve must be disconnected from the gas supply piping system.
- To check for leaks apply soap suds or a liquid detergent to each joint. Bubbles forming indicate a leak.
- Do not use an open flame to test for gas leaks. Fire or explosion could occur.
- Correct even the smallest leak at once.

4.16 Electrical Connections

⚠ WARNING: ELECTRICAL SHOCK HAZARD

Failure to follow safety warnings exactly could result in serious injury, death, and/or property damage.

Turn off electrical power at fuse box or service panel BEFORE making any electrical connections and ensure a proper ground connection is made before connecting line voltage.

⚠ AVERTISSEMENT: DANGER D'ÉLECTROCUTION

Ne pas respecter exactement les AVERTISSEMENTS de sécurité peut causer des dommages corporels graves ou mortels et/ou des dégâts matériels.

Coupez l'alimentation électrique en amont au boîtier de fusibles ou au panneau de distribution secteur AVANT d'effectuer des raccordements électriques, et assurez-vous qu'une bonne liaison de terre est réalisée avant de brancher la tension d'alimentation secteur.

Eubank HAA air conditioners with gas furnace MUST be wired and grounded in accordance with electrical codes, or in the absence of local codes, with the current editions of the National Electrical Code (NEC), ANSI/NRPA 70-2002 in the US. In Canada, follow the Canadian Electrical Code (CEC), C22.1 CSA.

The air conditioner may incorporate an internal crankcase heater for compressor protection. **The crankcase heater must be energized for at least 24 hours prior to starting the compressor.**

High Voltage Wiring

The power supply should have the proper voltage, phase, and ampacity for the selected model.

1. Refer to electrical data stamped on the unit rating plate for field wiring requirements. The electrical data lists heater sizes, fuse sizes, and wire sizes for all models. Also shown are the number for field power circuits required for the various modes with the electric heaters.

   Each unit is marked with a "Minimum Circuit Ampacity". This means that the field wiring used must be sized to carry that amount of current. Use "Copper Conductions Only". Refer to the National Electrical Code for complete current carrying capacity data on the various insulation grades of wiring materials.

   Note: Power supply service must be within allowable range (+10% - 5%) of rated voltage stamped on the unit rating plate. To operate nominal 230/208V unit at 208V, change the transformer line tap from 240V to 208V following the instruction on wiring label in unit.

2. Connect the wires to the input side of the internal breaker (L1 & L2 for single-phase units; L1, L2, & L3 for three phase models).

⚠ CAUTION

This system contains components that require phasing for correct rotation. Failure to observe rotation and correct on start-up will cause damage not covered by the warranty.

⚠ ATTENTION

Ce système contient des composants qui nécessitent un phasage pour une rotation correcte. Il faut observer le sens de rotation et le corriger tout de suite s'il y a lieu au démarrage, sous peine de dommages qui ne seraient pas couverts par la garantie.

Scroll compressors, like several other types of compressors, will only compress in one rotational direction. The direction of rotation is not an issue with single-phase compressors since they will always start and run in the proper direction. However, three phase compressors will rotate in either direction depending upon phasing of power. Since there is a 50-50 chance of connecting power in such a way as to cause rotation in the reverse direction, it is imperative to confirm that the compressor is rotating in the proper direction at the initial field start-up of the system. Verification of proper rotation is made by observing

that the suction pressure drops and the discharge pressure rises when the compressor is energized. An alternate method of verification for self contained system with small critical refrigerant charges, where the installation of gauges may be objectionable, can be made by monitoring the temperature of the refrigerant lines at the compressor. The temperature should rise on the discharge line while the suction line temperature decreases. Reverse rotation also results in a substantially reduced current draw when compared to tabulated values.

There is no negative impact on durability caused by operating three phase compressors in the reversed direction for a short duration of time, usually defined as less than one hour. However, after several minutes of operation the compressor's internal protector will trip. The compressor will then cycle on the protector until the phasing is corrected. Reverse operation for longer than one hour may have a negative impact on the bearings.

3. Install the ground wire on the ground lug.

Low Voltage Wiring

1. Pull the low voltage wiring from the air conditioner to the thermostat / sub-base assembly.
2. Mount the sub-base on a level plane. Connect the thermostat wire to the unit terminal board and the thermostat.
3. If applicable, attach the thermostat assembly to the sub-base. Check the stage two heat anticipator setting. For units with electric heat and thermostats with an adjustable heat anticipator, energize the electric heat and measure the current on the lead attached to the W2 terminal. Adjust/set the heat anticipator per the instructions provided with the thermostat.

Terminals 8 & 10 on the Eubank® HAA unit with economizer can be connected to a normally closed smoke alarm or fire stat to cause equipment shutdown when the circuit is opened. (Remove factory jumper).

THE INTERNAL TRANSFORMER IS NOT DESIGNED TO POWER OTHER EXTERNAL DEVICES.

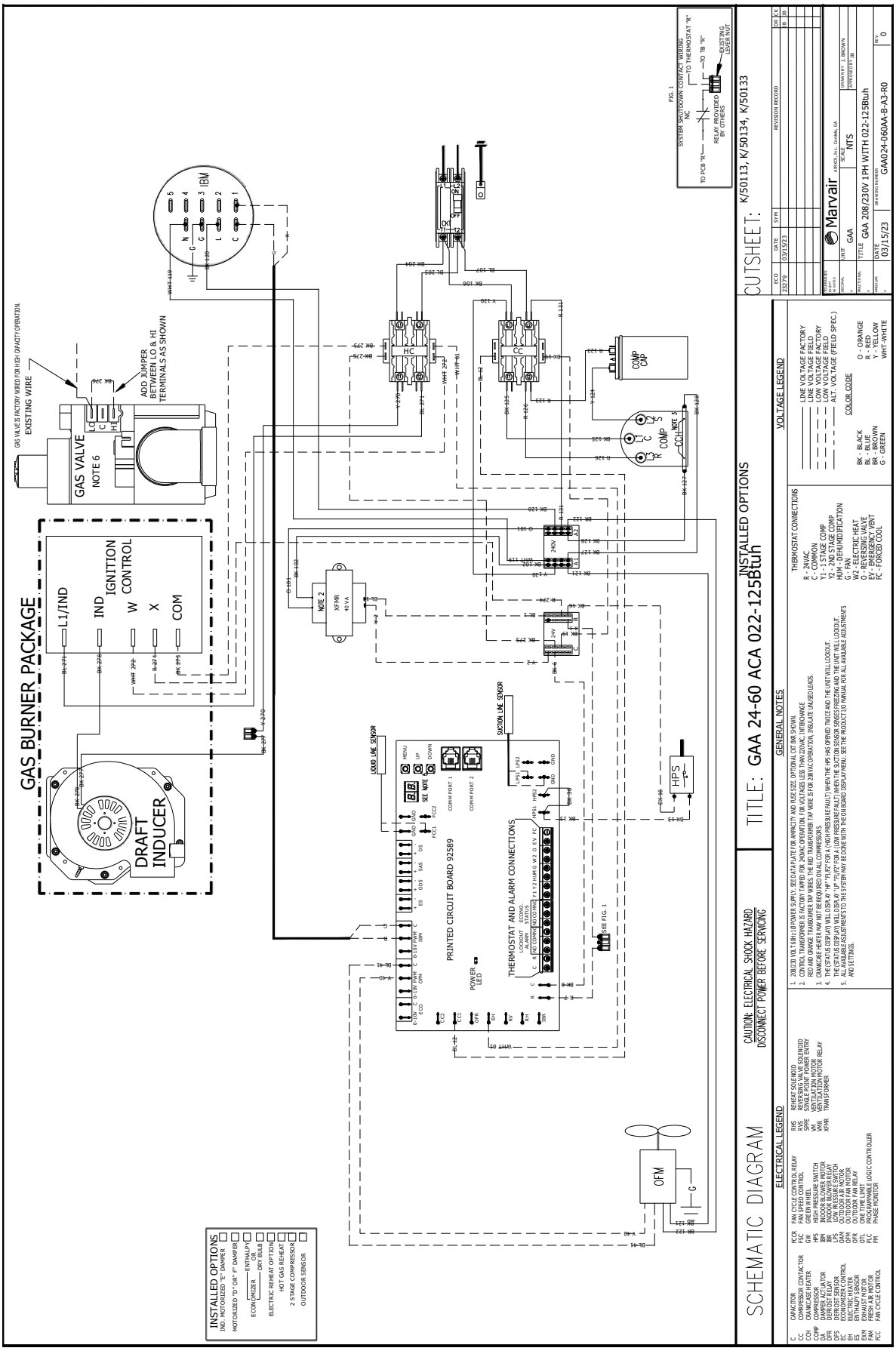

Figure 5a. Typical Electrical Schematic - 1Ø Power Supply

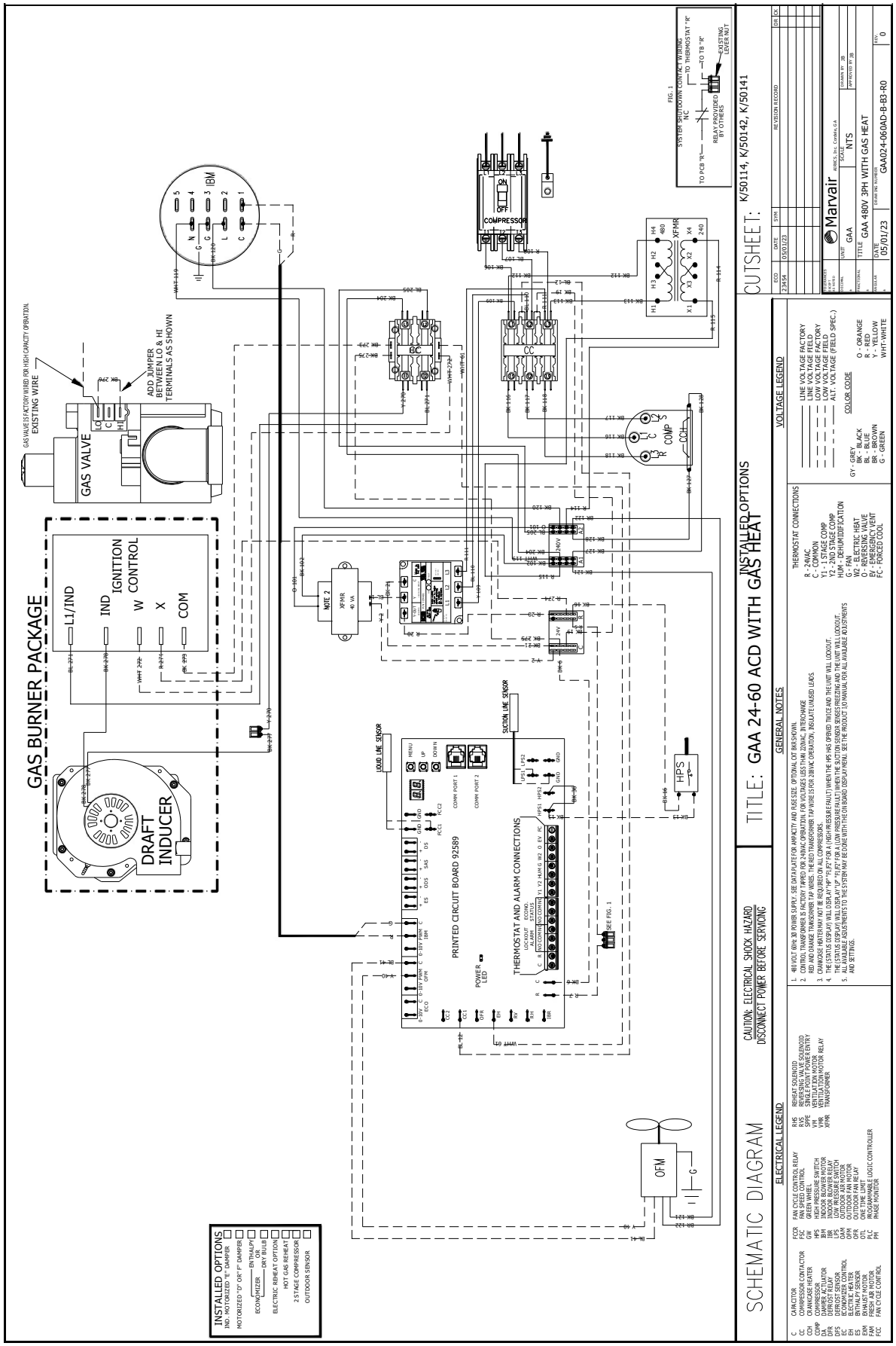

Figure 5b. Typical Electrical Schematic - 3Ø Power Supply

4.17 Venting of the Furnace

The wall mounted air conditioner with gas heat furnace is a Category I furnace, i.e., a central furnace which operates with a non-positive vent static pressure and with a flue loss not less than 17%. The furnace is fan assisted, i.e., an appliance equipped with an integral means to either draw or force products of combustion through the combustion changer and/or the heat exchanger. The installation of the furnace vent must be in accordance with the National Fuel Gas Code (NFGC), ANSI Z223.1-2000/NFPA 54-2002, and /or Section 7 and Appendix C of the CSA B149.1-00, National Standard of Canada, Natural Gas & Propane Installation Code; the local building codes; furnace and vent manufacturer's instructions. The air conditioner with gas heat shall not be connected to a chimney flue serving a separate appliance designed to burn solid fuel. Do not connect any other vents or flues from any other appliances to the flue of the unit. Multistory venting is prohibited. Single wall metal vents shall not be used. Vents must be installed vertically. Use only the vent supplied with the unit. Vent connectors shall not be connected into any portion of mechanical draft systems operating under positive pressure.

⚠ WARNING
CARBON MONOXIDE POISONING, FIRE, AND EXPLOSION HAZARD

Failure to properly vent this furnace could result in death, personal injury and/or property damage. Read and follow all the instructions in this section.

⚠ AVERTISSEMENT
DANGER DE MONOXYDE DE CARBONE, D'INCENDIE OU D'EXPLOSION

Une mauvaise ventilation de cette chaudière peut entraîner blessures graves ou mortelles et/ou dégâts matériels. Lisez et respectez toutes les instructions dans cette section.

4.18 Installation of the Vent Hood.

1. The vent hood assembly is shipped inside the compressor/lower compartment. Remove the side screen to access the vent hood assembly.
2. Attach the vent hood for the wall mounted air conditioner with gas heat furnace as shown below. Maintain 18" clearance between the vent hood and any thing that would restrict or impede air flow from the hood.

VENT HOOD OPENING | INSERT TAB IN THE HOOD INTO THE SLOT IN THE UNIT | SECURE HOOD TO UNIT WITH TWO SCREWS | COMPLETED INSTALLATION

Figure 6. Vent Hood Installation

3. The intake of the combustion air is thru louvers located on the side of the wall mounted air conditioner with gas heat furnace. Maintain 19" clearance between the louvers and anything that would restrict or impede air flow into the louvers.

Chapter 5 Checks and Adjustments

The unit must be operating in the heating mode while doing the following check and adjustments. Refer to the Start up instructions for starting the unit.

⚠ WARNING
ELECTRICAL SHOCK, FIRE, EXPLOSION OR CARBON MONOXIDE POISONING HAZARD

Failure to follow safety warnings exactly could result in serious injury, death and/or property damage.

If any sparks, odors or unusual noises occur, IMMEDIATELY shut OFF gas and power to the unit. Check for wiring errors, gas leaks or obstructions to the blower.

⚠ AVERTISSEMENT
DANGER D'ÉLECTROCUTION, INCENDIE, EXPLOSION OU EMPOISONNEMENT AU MONOXYDE DE CARBONE

Ne pas respecter exactement les AVERTISSEMENTSde sécurité peut causer des dommages corporels graves ou mortels et/ou des dégâts matériels.

En cas de constatation d'étincelles, odeurs ou bruits anormaux, COUPEZ IMMÉDIATEMENT le gaz et l'alimentation secteur de l'unité. Vérifiez s'il y a des erreurs de câblage, des fuites de gaz ou des obstructions au soufflage.

5.1 Gas Supply Pressure

Gas supply pressure should be within the minimum and maximum values listed on the data plate on the air conditioner with gas heat furnace. Pressures are typically set by the gas supplier.

5.2 Manifold Gas Pressure Adjustment

⚠ WARNING
FIRE, EXPLOSION OR CARBON MONOXIDE POISONING HAZARD

Failure to turn the gas OFF at the shut off valve before connecting manometer could result in death and/or personal injury.

Turn the gas valve to OFF before connecting the manometer.

⚠ AVERTISSEMENT
DANGER D'INCENDIE, EXPLOSION OU EMPOISONNEMENT AU MONOXYDE DE CARBONE

Ne pas couper l'arrivée de gaz au robinet de coupure avant de brancher le manomètre peut causer des blessures graves ou mortelles.

Fermez le robinet de gaz (position OFF) avant de brancher le manomètre.

1. With gas valve OFF, connect the manometer to manifold pressure tap on outlet (1/8" NPT) of the gas control valve. Use a manometer with a 0" to 12" water column range.

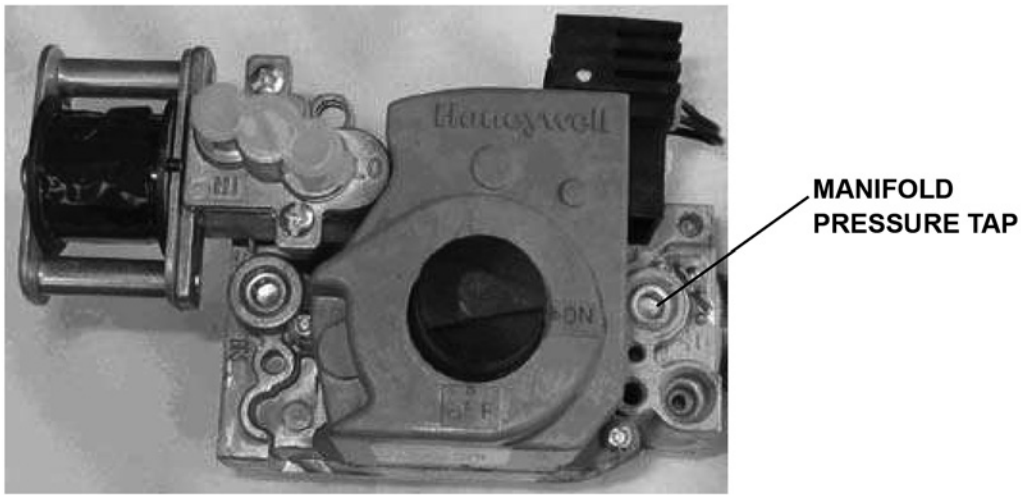

Figure 7. Gas Valve Manifold Pressure Tap

2. Turn gas ON. Operate furnace by using a jumper wire on the “10” and “4” thermostat connections on the low voltage board. The board is located in the electrical compartment in the unit.
3. Regulator pressure may be adjusted by removing the plastic cap on top of gas valve, as shown below. Turn the “HI” adjustment screw counterclockwise to decrease the manifold pressure and clockwise to increase the manifold pressure. Set the manifold pressure to 3.5” w.c. for Natural Gas and 10.0” w.c. for LP gas. Only adjust the setting marked “HI”. A 3/32” Allen Key is required for adjustment.

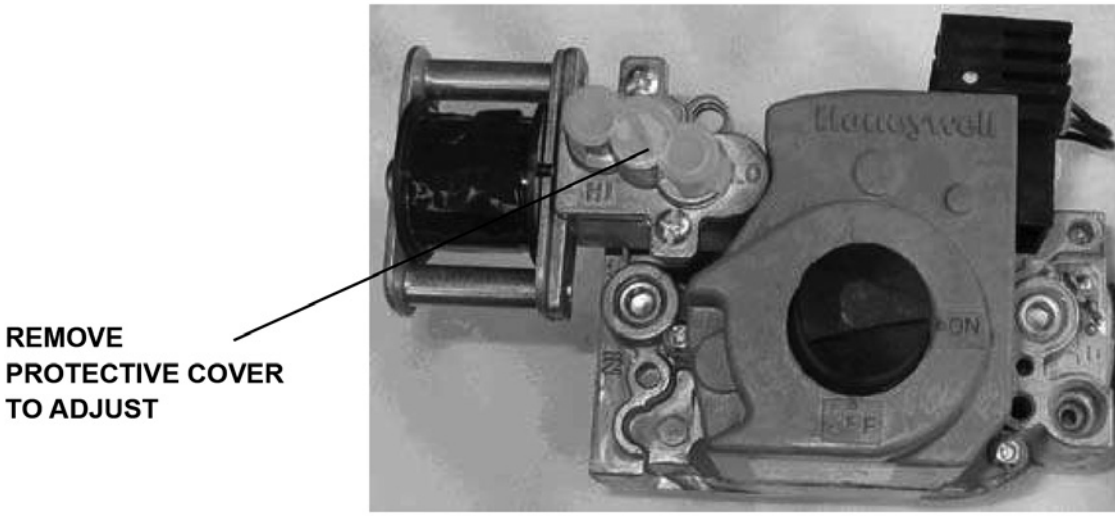

Figure 8. Gas Valve Protective Cover

4. When the manifold pressure is properly set, replace the adjustment screw cover on the gas control valve.
5. Remove manometer and replace the 1/8” NPT tapping.

⚠ WARNING
FIRE, EXPLOSION HAZARD

Failure to replace the 1/8” NPT tapping will result in accumulation of gas and an explosion.

⚠ AVERTISSEMENT
DANGER D’INCENDIE OU EXPLOSION

Ne pas remplacer le taraudage 1/8” NPT peut entraîner une accumulation de gaz suivie d’une explosion.

6. Remove jumper wire.
7. Check for gas leaks at the plug and repair as required.

5.3 Natural Gas Input Rating Check

The gas meter can be used to measure the input to the furnace.

Check with the gas supplier for the actual BTU content of the gas.

1. Turn off the gas supply to any other appliance, other than the unit, and start the furnace. Use jumper wire “10” to “4” as described in 2 above.
2. With a watch or stop watch, time how many seconds it takes the smallest dial on the gas meter to make one complete revolution. Note: if the meter has 2 cubic foot dials, divide seconds by two. See example below. The example is based upon a natural gas BTU content of 1,000 BTU’s per cubic foot.

Natural Gas BTU Content	No. of Seconds per Hour	Time per Cubic Foot in Seconds	BTU per Hour
1,000	3,600	50	72,000
(1,000 x 3,600) /48 = 72,000 BTUH			

Table 5. Natural Gas Input Rating

3. Remove jumper wire from “10” to “4”.
4. Relight any appliances turned off in step one and that all are operating properly.

5.4 Orifice Sizing

Ensure that the furnace has the correct main burner orifices for the altitude of the site. Refer to the following table for the correct orifice for both natural and propane gas.

HMG 22,500 BTUH/Burner (Used with HAA1024-1036 Heat Exchangers)				
Altitude	Orifice- Natural		Orifice- Propane	
	Drill Size	Dia.	Drill Size	Dia.
0-1999 ft	#43	0.089	#54	0.055
2000-2999 ft	2.2	0.0866	1.35	0.531
3000-3999 ft	2.15	0.0846	#55	0.052
4000-4999 ft	2.1	0.0827	1.3	0.0511
5000-5999 ft	#45	0.082	1.25	0.0492
6000-6999 ft	2.05	0.087	1.2	0.0472

HMG 25,000 BTUH/Burner (Used with HAA1042-1060 Heat Exchangers)				
Altitude	Orifice- Natural		Orifice- Propane	
	Drill Size	Dia.	Drill Size	Dia.
0-1999 ft	2.30	0.0906	1.5	0.0591
2000-2999 ft	#43	0.0890	#54	0.0550
3000-3999 ft	2.20	0.0866	1.35	0.0531
4000-4999 ft	2.15	0.0846	#55	0.0520
5000-5999 ft	2.10	0.0827	1.30	0.0511
6000-6999 ft	#45	0.0820	1.25	0.0492

Burner Input	Number of Orifices	Burner Input	Number of Orifices
40,500	2	81,000	4
45,000	2	90,000	4
60,750	3	100,000	4
67,500	3	112,500	5
75,000	3	125,000	5

Orifice Size (mm)	Orifice Diameter	Orifice Size (mm)	Orifice Diameter
2.10	0.0826	2.45	0.0964
2.15	0.0846	2.50	0.0984
2.20	0.0866	2.60	0.1024
2.25	0.0885	2.70	0.1063
2.30	0.0905	2.75	0.1082
2.35	0.0925	2.80	0.1102
2.40	0.0945	2.90	0.1142

Table 6. Altitude/Orifice Sizing

5.5 LP Gas Conversion

The following instructions are for the field conversion of a Eubank gas heat with air conditioning from using Natural Gas to LP (propane) gas. This kit includes parts required to convert a burner assembly beginning with model number HMG075-125 only. Refer to the name plate attached to the right side of the burner assembly to verify the first three letters of the Model number. These instructions are specific to this burner assembly only.

The kit contains the following items required to make the conversion:

Item	Qty.	Description
1	1	Gas valve regulator conversion kit – Honeywell P/N 396021
2	5	Gas orifices – Drill size 1.5mm for propane gas
3	1	Label to attach to the manifold indicating that the unit has been converted to use LP Gas.

⚠ WARNING
FIRE, CARBON MONOXIDE OR EXPLOSION HAZARD

Failure to properly install the LP gas conversion kit could result in death, serious injury or property damage.

The unit is shipped from the factory for operation on natural gas. When used on LP gas, the gas orifice spud and the gas valve spring must be replaced and the gas valve regulator must be adjusted. This conversion kit shall be installed by a qualified service agency in accordance with the manufacturer's instructions and all applicable codes and requirements of the authority having jurisdiction. If the information in these instructions is not followed exactly, a fire, explosion or production of carbon monoxide may result causing property damage, personal injury or loss of life. The qualified service agency performing this work assumes the responsibility for the proper conversion of the appliance with this kit.

⚠ AVERTISSEMENT
DANGER D'INCENDIE, MONOXYDE DE CARBONE OU EXPLOSION

Ne pas installer correctement le kit de conversion au gaz propane (LP) peut entraîner des blessures graves ou mortelles ou des dégâts matériels.

L'unité est livrée de l'usine pour fonctionner au gaz naturel. Quand elle est utilisée avec du gaz propane, il faut remplacer tête d'injecteur et ressort de vanne, et le réglage du régulateur de vanne de gaz doit être modifié. Ce kit de conversion ne doit être installé que par une agence de dépannage qualifiée en suivant les instructions du constructeur et toutes les normes et exigences applicables édictées par les autorités ayant juridiction dans ce domaine. Si les informations contenues dans ces instructions ne sont pas suivies exactement, il peut en résulter un empoisonnement au monoxyde de carbone ou une explosion, causant dommages, blessure ou mort. C'est l'agence de dépannage qualifiée qui effectue le travail qui assume la responsabilité de la conversion correcte de l'appareil avec ce kit.

LP Gas Conversion Installation Procedures

1. First, shut off all gas supply to the unit using the manual shut off valve. The gas must be shut off BEFORE disconnecting the electrical power or proceeding with any other step in the LP gas conversion.
2. Disconnect or shut off all electrical power to the unit and then turn the thermostat to the OFF position.
3. Disconnect wire to the gas valve. If wire colors are not evident or do not match the wiring diagram, label each wire.
4. Loosen the gas pipe union and remove the gas supply pipe from the gas valve.

5. Remove the screws holding the manifold pipe assembly to the burner assembly.
6. Remove manifold.
7. Loosen and remove the Natural Gas Orifices and remove from the manifold.
8. Install LP gas orifices provided with the kit.
9. Open the Gas Valve Regulator conversion kit and follow the instructions provided for conversion of the gas valve regulator. Be sure to apply the label indicating that the valve has been converted from Natural Gas to LP gas.
10. Secure the manifold burner assembly to the burner assembly with the four screws. Be sure the orifices are aligned with the opening on each burner.
11. Reconnect the gas supply pipe, using pipe joint compound resistant to LP gas on the pipe threads, to the gas valve. Tighten the union fitting.
12. Reconnect wires to the gas valve following the wiring diagram provided on the unit.
13. Turn on the gas supply at the manual shut off valve.
14. Carefully leak check union fitting and connection at gas valve using soap suds or a liquid detergent to each joint. Bubbles indicate a leak. Correct even the smallest leak immediately. Do NOT use a flame to check for leaks.
15. Turn Gas Valve to OFF.
16. With gas valve OFF, connect the manometer to manifold pressure tap on outlet (1/8" NPT) of the gas control valve. Use a manometer with a 0" to 12" water column range.

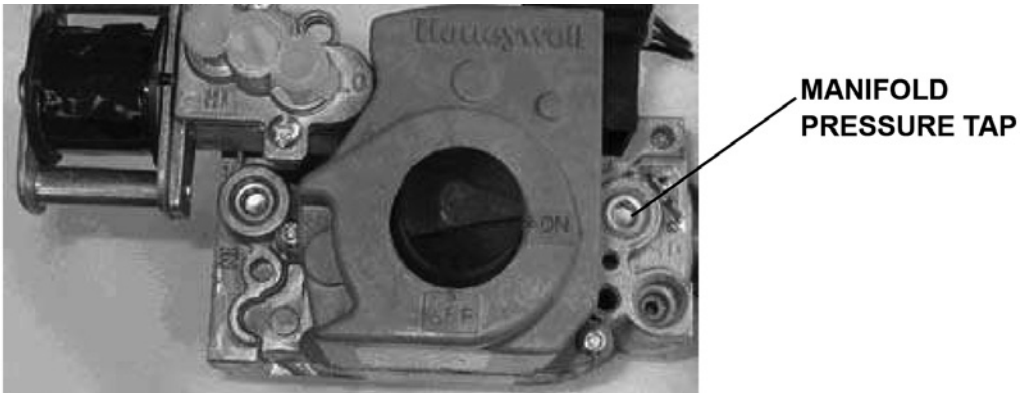

Figure 9. Gas Valve Manifold Pressure Tap

17. Turn gas ON. Operate furnace by using a jumper wire on the "10" and "4" thermostat connections on the low voltage board. The board is located in the electrical compartment in the unit.
18. Regulator pressure may be adjusted by removing the plastic cap on top of gas valve, as shown below. Turn the "HI" adjustment screw counterclockwise to decrease the manifold pressure and clockwise to increase the manifold pressure. Set the manifold pressure to 10.0" w.c. for LP gas. Only adjust the setting marked "HI". A 3/32" Allen Key is required for adjustment.
19. When the manifold pressure is properly set, replace the adjustment screw cover on the gas control valve.
20. Remove manometer and replace the 1/8" NPT tapping.

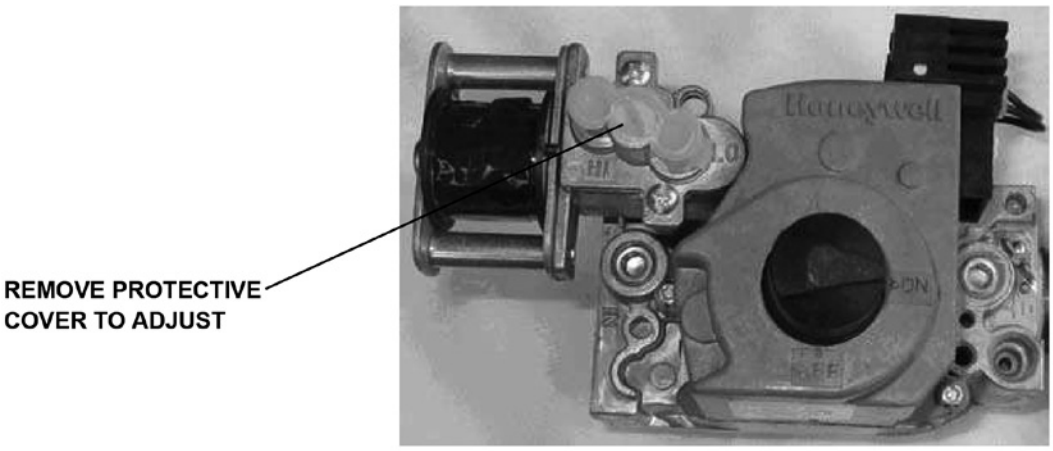

Figure 10. Gas Valve Protective Dust Cover

⚠ WARNING
FIRE, EXPLOSION HAZARD

Failure to replace the 1/8" NPT tapping will result in accumulation of gas and an explosion.

⚠ AVERTISSEMENT
DANGER D'INCENDIE OU EXPLOSION

Ne pas remplacer le taraudage 1/8" NPT peut entraîner une accumulation de gaz suivie d'une explosion.

21. Remove jumper wire.
22. Check for gas leaks at the plug and repair as required.

5.6 High Altitude Installations

⚠ WARNING
FIRE, EXPLOSION, CARBON MONOXIDE POISONING HAZARD

Failure to follow these instructions exactly could result in death, personal injury and/or property damage.

This high altitude conversion must be done by a qualified service agency in accordance with the following instructions or in the absence of local codes, the applicable national code.

⚠ AVERTISSEMENT
DANGER D'INCENDIE, EXPLOSION OU MONOXYDE DE CARBONE

Ne pas respecter exactement des instructions peut causer des dommages corporels graves ou mortels et/ou des dégâts matériels.

Cette conversion pour altitude importante doit être réalisée par une agence de dépannage qualifiée en suivant les instructions qui suivent et les normes locales, ou les normes nationales en leur absence.

All Eubank HAA units are shipped from the factory for operation at sea level up to 2,000 feet (610 m). For installations from 2,000 (610 m) to 7,000 feet (2,134 m), see the following chart for proper sizing of the orifice.

When the air conditioner with gas heat is installed above 7,000 ft. (2,134 m), please contact Eubank.

HMG 22,500 BTUH/Burner (Used with HAA1024-1036 Heat Exchangers)				
Altitude	Orifice- Natural		Orifice- Propane	
	Drill Size	Dia.	Drill Size	Dia.
0-1999 ft	#43	0.089	#54	0.055
2000-2999 ft	2.2	0.0866	1.35	0.531
3000-3999 ft	2.15	0.0846	#55	0.052
4000-4999 ft	2.1	0.0827	1.3	0.0511
5000-5999 ft	#45	0.082	1.25	0.0492
6000-6999 ft	2.05	0.087	1.2	0.0472

HMG 25,000 BTUH/Burner (Used with HAA1042-1060 Heat Exchangers)				
Altitude	Orifice- Natural		Orifice- Propane	
	Drill Size	Dia.	Drill Size	Dia.
0-1999 ft	2.30	0.0906	1.5	0.0591
2000-2999 ft	#43	0.0890	#54	0.0550
3000-3999 ft	2.20	0.0866	1.35	0.0531
4000-4999 ft	2.15	0.0846	#55	0.0520
5000-5999 ft	2.10	0.0827	1.30	0.0511
6000-6999 ft	#45	0.0820	1.25	0.0492

Burner Input	Number of Orifices	Burner Input	Number of Orifices
40,500	2	81,000	4
45,000	2	90,000	4
60,750	3	100,000	4
67,500	3	112,500	5
75,000	3	125,000	5

Orifice Size (mm)	Orifice Diameter	Orifice Size (mm)	Orifice Diameter
2.10	0.0826	2.45	0.0964
2.15	0.0846	2.50	0.0984
2.20	0.0866	2.60	0.1024
2.25	0.0885	2.70	0.1063
2.30	0.0905	2.75	0.1082
2.35	0.0925	2.80	0.1102
2.40	0.0945	2.90	0.1142

Table 7. Altitude/Orifice Sizing

NOTE: Data for LP gas is based upon a 0.60 specific gravity. For fuels with different specific gravity, consult the National Fuel Gas Code ANSI Z223.1/NFPA 54-2002 or the National Standard of Canada, Natural & Propane Gas Installation Code CSA B149.1-00.

High Altitude Air Pressure Switch

The factory installed pressure switch is factory set for installations from sea level up to 6,000 ft (1,829 m). Consult the factory for installations above 6,000 ft.

5.7 Changing Orifices

1. Turn OFF gas at the shut off valve.
2. Turn off all power to the unit at the fuse box or service panel.
3. Remove the burner compartment door, exposing the burner.
4. Disconnect the gas line from gas valve so that manifold can be removed.
5. Disconnect wiring at the gas valve. Be sure to note or mark the location of all electrical connections.
6. Remove the 4 screws holding the manifold and gas valve to the manifold supports. Keep screws.
7. Carefully remove the manifold assembly.
8. Remove the orifices from the manifold and replace them with the proper sized orifices.
9. Tighten orifices so that they are seated and gas tight.
10. Reassemble all parts in the reverse order as removed. Be sure to engage the main burner orifices in the proper openings in the burners.

11. After reassembly, turn on the gas and check for leaks using a soapy solution. Correct all leaks immediately.
12. Turn power back on to the unit.
13. Turn gas ON at the shut off valve.

5.8 Main Burner Flame Check

Allow the furnace to run for at least 10 minutes. Then inspect the main burner flame.

Look at the flames on the burners. They should be predominately blue in color and robust in appearance. The flame should be in the middle of the heat exchanger tubes. Check to see that all the burners are lit and that the flame does not impinge on the sides of the heat exchanger. Observe the flame. There should be little or no change to the shape or size of the flame. Changes in the shape and size of the flame may indicate a leak in the heat exchanger. See Figure 10.

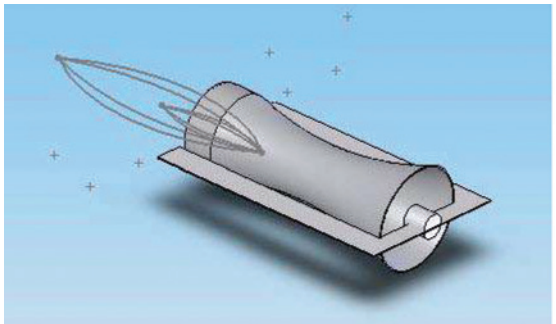

Figure 11. Burner Flame

Distorted flame or yellow tips of the natural gas flame or long yellow tips on LP gas flames may be caused by one or more of the following:

1. Lint or dirt inside the burner or burner ports,
2. Lint or dirt at the air inlet between the burner and the manifold pipe, or
3. An obstruction over the burner plate.

If any of these are visible, turn the unit off and use a vacuum or a soft brush to clean the affected areas.

5.9 Temperature Rise Range

When the unit is in the heating mode, the inlet air and outlet air temperatures should be measured to ensure that the temperature rise (the difference between the outlet air temperature and the inlet air temperature) is within an acceptable range as shown below. The temperatures must be measured at the discharge of the supply and the intake of the return air with no more than a .35 IWG static pressure.

Heating Input (Btu/Hr)	Temperature Rise at 0.35" H2O External Static Pressure (°F)					
	Gas/Electric Model Number					
	HAA1024A	HAA1030A	HAA1036A	HAA1042A	HAA1048A	HAA1060A
45,000	25 to 55	25 to 55	25 to 55			
67,500	40 to 70	40 to 70	40 to 70			
90,000	50 to 80	50 to 80	50 to 80			
75,000				25 to 55	25 to 55	25 to 55
100,000				40 to 70	40 to 70	40 to 70
125,000				50 to 80	50 to 80	50 to 80

Table 8. Temperature Rise Range

Chapter 6 Start-Up

Before lighting the unit, smell around the unit for gas. Be sure to smell next to the floor because LP gas is heavier than air and will settle on the floor.

The gas valve on your unit is equipped with an ON/OFF knob. Use only your hand to turn the knob Never use tools. If the knob will not push in or turn by hand, do not try to repair it. Call a qualified service technician. Force or attempted repair may result in a fire or explosion.

The air conditioner with gas heat is equipped with an automatic spark ignition system. There is no pilot. In case of a safety shutdown on units with electronic temperature control, shut main disconnect OFF and then back ON to reset ignition control. On units with an electro-mechanical thermostat, move the thermostat switch to OFF and return the thermostat switch to HEAT. On initial start-up of the unit in the heating mode, a burn-off of excess paint and oils remaining from the manufacturing process may cause some smoking and smell for 5-10 minutes.

6.1 Cooling Cycle

1. Set the fan switch to "Auto" and the system switch to "Off".
2. Move the cooling temperature on the wall thermostat to a point higher than the room temperature. Move the heating temperature to a temperature that is lower than the room temperature.
3. Set the thermostats system switch to "Cool" or "Auto" position. Nothing should operate at this time.
4. Set the time delay in the control box to three minutes. Note that time delay is an option on some units and may not be on your air conditioner.
5. Remove the cover plate from the thermostat. Slowly lower the thermostat cooling temperature. Once the indoor fan turns on, allow approximately three minutes for the compressor and outdoor fan to start.

For units equipped with the low ambient control, note that the outdoor fan may not come on immediately, because it is cycled by refrigerant pressures. Some units have a time delay module which prevents the compressor from restarting immediately after interruption of power. See Cooling Mode section of the Installation Instructions for details on the operation of the low ambient control and the time delay.

6.2 Heating Cycle

1. Turn off electrical power to the unit.
2. Set thermostat to its lowest setting.
3. Remove heat section access panel.
4. Turn knob on the gas control valve to ON. Do not force. Never light the burner with a match or torch.

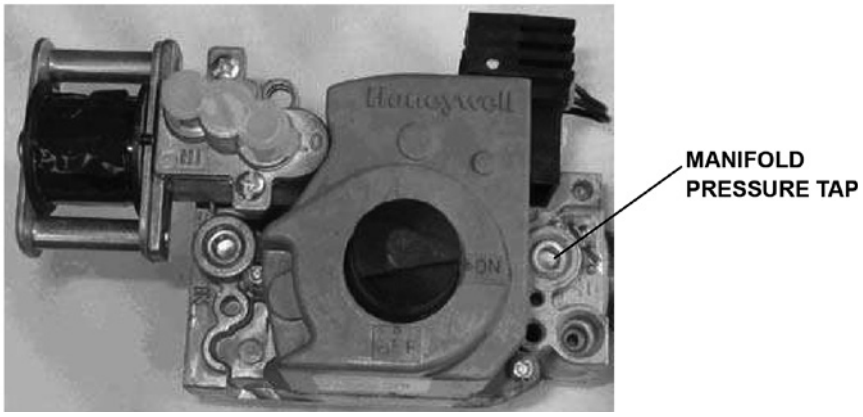

Figure 12. Gas Control Valve On Switch

5. Replace heat section access panel.
6. Turn on electrical power to the unit.
7. Set room thermostat to desired temperature.
8. On a call for heating, the air switch closes, initiating a 30 second pre-purge.
9. At end of pre-purge period, the Spark and Gas valve is energized for up to a 5 second ignition trial. Gas valve will open.
10. Burners ignite and carryover.
11. Flame is detected by the flame sensor and control operates in a steady state condition.
12. Unit continues to heat until the room temperature set point is met.

If ignition is not achieved within 5 seconds, the gas valve is shut off, the inducer keeps running for an interpurge period of 60 seconds and additional ignition trials follow the specified sequence. If after three trials for ignition have occurred without proper ignition and flame detection, the control is locked out.

Control may be brought out of lockout by cycling the thermostat or turning the main power off for at least 5 seconds. Control will also attempt another ignition sequence after a one hour after a lock out occurrence.

13. If flame is lost once it has been established, the control will shut off the gas supply within 0.8 seconds and enter the interpurge period. Control will initiate up to 3 additional trials per normal operation sequence.

14. If flame sensor indicates presence of flame during purge period, when no flame should be present, the inducer will remain energized but the gas valve will not be energized until the cause of the “false flame” is removed.

15. If the air pressure switch is closed when the inducer is energized or does not close after the inducer is energized, the control will wait one minute for the air switch to open or close and then lock out.

16. If the control detects power to the gas valve when it should be off, or if no power when it should be on, the control will go into lock out with all outputs off.

LED Flash Code	
On- Steady	**Control operation normal**
1 Flash	**Open pressure switch, limit switch or flame rollout switch**
2 Flashes	**Pressure switch stuck closed**
3 Flashes	**Ignition/flame sensor failure**
4 flashes	**Repeated flame losses**
5 flashes	**Internal control fault**
6 flashes	**Repeated pressure switch losses**

6.3 Start-Up Checklist

Dealer Name: _____

Address: _____

City/State/Zip: _____

Phone: _____

Business Card Here

Owners Name: _____

Address: _____

City/State/Zip: _____

Model Number: _____

Serial Number: _____

Type of Gas: Natural ☐ LP ☐

Blower Motor HP: _____

Supply Voltages: _____

Limit Opens at: _____°F or _____°C

Limit Closes at: _____°F or _____°C

Temperature of Supply Air: _____°F or _____°C

Temperature of Return Air: _____°F or _____°C

Rise (Supply Temp. – Return Temp.): _____°F or _____°C

Filter Type and Size: _____

Fan "Time ON" Setting: _____

Fan "Time OFF" Setting: _____

Manual Gas Shut-Off Upstream of Furnace/Drip-Leg?

YES ☐ NO ☐

Drip-Leg Upstream of Gas Valve? YES ☐ NO ☐

Blower Speed Check? YES ☐ NO ☐

All Electrical Connections Tight? YES ☐ NO ☐

Gas Valve OK? YES ☐ NO ☐

Measured Line Pressure When Firing Unit: _____

Gas Input Rating Check: _____
(See *Checks and Adjustments* section)

Measured Manifold Pressure: _____

Thermostat OK? YES ☐ NO ☐

Sub-Base Level? YES ☐ NO ☐

Anticipator Set? YES ☐ NO ☐ Set At? _____

Breaker On? YES ☐ NO ☐

Date of Installation: _____

Date of Start-up: _____

Dealer Comments: _____

Chapter 7 Maintenance

⚠ WARNING
ELECTRICAL SHOCK, FIRE OR EXPLOSION HAZARD

Failure to follow safety warnings exactly could result in dangerous operation, serious injury, death or property damage.
Improper servicing could result in dangerous operation, serious injury, death or property damage.

- **Before servicing, disconnect all electrical power to the unit.**
- **When servicing controls, label all wires prior to disconnecting. Reconnect all wires correctly.**
- **Verify proper operation after servicing.**

⚠ AVERTISSEMENT
DANGER D'ÉLECTROCUTION, DANGER D'INCENDIE OU D'EXPLOSION

Ne pas suivre les AVERTISSEMENTS de sécurité à la lettre peut entraîner un fonctionnement dangereux, des blessures graves ou mortelles ou des dégâts matériels.
Une intervention inappropriée peut entraîner un fonctionnement dangereux, des blessures graves ou mortelles ou des dégâts matériels.

- **Avant d'intervenir, débranchez toute alimentation électrique vers l'unité.**
- **Quand vous intervenez sur des commandes, étiquetez les fils avant de les débrancher, afin de les rebrancher tous correctement.**
- **Vérifiez le bon fonctionnement après une intervention.**

7.1 Maintenance – Burner and Vent Outlet.

Eubank strongly recommends that the unit be serviced a minimum of twice a year – once prior to the heating season and once prior to the cooling season. At this time the filters, evaporator coil, condenser coil, the cabinet, and condensate drains, the burner flame, the burner and the combustion air inlet and outlet should be serviced and inspected as described below. Also at this time, the unit should be operated in the cooling and heating cycles as described in Chapter 2, Start-Up. In addition to this seasonal check-out, the unit should be maintained as follows:

7.2 Air Filter

Replace the air filter whenever it is visibly dirty. Note: Filters must be U.L.C approved or equivalent for use in Canada.

7.3 Indoor Coil

If the coil becomes clogged or dirty, it may be cleaned by careful vacuuming or with a commercial evaporator cleaning spray. DO NOT use a solvent containing bleach, acetone, or flammable substances. Turn power OFF before cleaning. Be careful not to wet any of the electrical components. Be sure the unit has dried before restarting.

7.4 Outdoor Coil

Periodically inspect the outdoor coil and the cabinet air reliefs for dirt or obstructions. Remove foreign objects such as leaves, paper, etc.

If the coil is dirty, it may be washed off with a commercial solvent intended for this purpose. TURN OFF POWER BEFORE CLEANING! Be sure that all electrical components are thoroughly dry before restoring power.

7.5 Cabinet

The cabinet may be cleaned with a sponge and warm, soapy water or a mild detergent. Do not use bleach, abrasive chemicals or harmful solvents.

⚠ WARNING
CARBON MONOXIDE POISONING

A crack or hole in the heat exchanger could result in carbon monoxide gas which can cause death or serious injury. Carbon monoxide is colorless and odorless. Signs that there is a hole or crack in the heat exchanger include:

- **Headaches, Nausea or Dizziness.**
- **Excessive humidity or heavily frosted windows or a clammy feeling in the structure.**

⚠ AVERTISSEMENT
EMPOISONNEMENT AU MONOXYDE DE CARBONE

Une fissure ou un trou dans l'échangeur thermique peut laisser échapper du gaz avec monoxyde de carbone qui peut causer des troubles sévères ou mortels. Le monoxyde de carbone est sans couleur et sans odeur. Les signes pouvant indiquer un problème d'étanchéité sur l'échangeur thermique sont :

1. **Maux de tête, nausées ou vertiges.**
2. **Humidité excessive ou fenêtres très givrées, ou viscosité sur la structure.**

7.6 Drains

Regularly check the condensate drain. If a commercial drain solvent is used, flush out the drain pan and system with plenty of fresh water to prevent corrosion.

7.7 Lubrication

Oiling of the condenser fan motor or the evaporator blower motor is not recommended.

7.8 Burner Flame

Inspect the burner flame periodically during the heating season to ensure proper burner operation.

Light the burners and allow the unit to operate for a few minutes to establish normal burning conditions. Look at the flames on the burners. They should be predominately blue in color and robust in appearance. The flame should be in the middle of the heat exchanger tubes. Check to see that all the burners are lit and that the flame does not impinge on the sides of the heat exchanger. Observe the flame. There should be little or no change to in the shape or size of the flame. Changes in the shape and size of the flame may indicate a leak in the heat exchanger. See Figure 3.

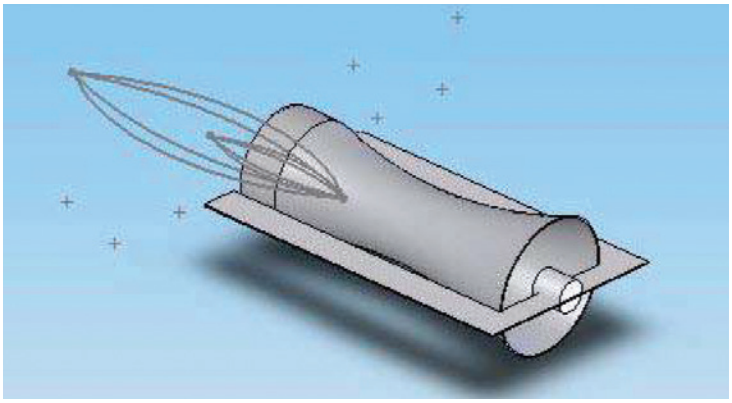

Figure 13. Burner Flame

Distorted flame or yellow tips of the natural gas flame or long yellow tips on LP gas flames may be caused by one or more of the following:

1. Lint or dirt inside the burner or burner ports,
2. Lint or dirt at the air inlet between the burner and the manifold pipe, or any obstruction over the burner plate.

If any of these are visible, turn the unit off and use a vacuum or a soft brush to clean the affected areas.

7.9 Burner

Inspect the burners at least once a year, prior to each heating season, for rust, water damage or dust accumulation. The burner should be replaced if rust or water damage is present. Dust should be removed ifpresent.

7.10 Combustion Air Inlet and Outlet

Visually inspect both the combustion air inlet and gas outlet at least once a year, prior to the heating season, to make sure that there is no build up of soot, debris or dirt. If required, clean to maintain adequate air flow.

Service reminder!

Always call a qualified service technician if the unit is not working properly. Before calling, check the following to be sure service is required:

1. Be sure the electrical disconnect is ON.
2. Check room thermostat for proper setting.
3. Replace any blown fuses or reset circuit breakers.
4. Gas valve must be ON.
5. Air filters should not be plugged, limiting air flow.
6. Make sure all service panels are in place.

7.11 Venting of the Furnace

The Eubank HAA wall mounted air conditioner with gas heat furnace is a Category I furnace, i.e., a central furnace which operates with a non-positive vent static pressure and with a flue loss not less than 17%. The furnace is fan assisted. The installation of the furnace vent must be in accordance with the National Fuel Gas Code (NFGC), ANSI Z223.1-2000/NFPA 54-2002, and /or Section 7 and Appendix C of the CSA B149.1-00, National Standard of Canada, Natural Gas & Propane Installation Code; the local building codes; furnace and vent manufacturer's instructions.

⚠ WARNING : CARBON MONOXIDE POISONING, FIRE, AND EXPLOSION HAZARD

Failure to properly vent this furnace could result in death, personal injury and/or property damage. Read and follow all the instructions in this section.

⚠ AVERTISSEMENT
DANGER D'EMPOISONNEMENT AU MONOXYDE DE CARBONE, D'INCENDIE OU D'EXPLOSION

Une mauvaise ventilation de cette chaudière peut entraîner blessures graves ou mortelles et/ou dégâts matériels. Lisez et respectez toutes les instructions dans cette section.

7.12 Clearances

Maintain 18" clearance between the vent hood and anything that would restrict or impede air flow from the hood. The intake of the combustion air is thru louvers located on the side of the wall mounted air conditioner with gas heat furnace. Maintain 19" clearance between the louvers and anything that would restrict or impede air flow into the louvers.

Chapter 8 Parts List

MAJOR PURCHASED PARTS		HAA1042	HAA1048
Compressor, Scroll	A	10052	10202
	C	10093	10203
	D	10094	10204
Capacitor, Scroll Compressor		50322	50294
		55 / 370	60 / 440
Refrigerant R410A (Oz)	60 Hz	123	128
Sound Blanket, Compressor		20017	20038
Crankcase Heater, Compressor		n/a	70044
Evaporator Coil		60348	60348
		3EY1403D	3EY1403D
		18 x 37	18 x 37
TXV		20366	20366
		n/a	.070 x 70 (4)
(.378/.382 by Four .127/.131)		n/a	80042
(.378/.382 by Three .114/.118)		n/a	n/a
(.378/.382 by Two .127/.131)		n/a	n/a
Strainer Assembly (Alternate)		n/a	20297
Distributor - Indoor		20662	n/a
Condenser Coil		60350	60345
		3CY13003D-	3CY13003D-
		28 x36	28 x 36
Filter Drier		70389	70389
Indoor Motor (HP/RPM)		40099	40099
		1/2 1075	1/2 1075
Blower, L.H.		30090	30090
Blower, R.H.		30092	30092
Blower Wheel / Housing		10-8 DD	10-8 DD
Outdoor Motor (HP/RPM)		40190	40190
		1/2 ECM	1/2 ECM
Fan Blade (Clockwise Rotation)		30236	30236
		T2404-20	T2404-20
High Pressure Control (660 Open, 450 Close)		70656	70656
Low Pressure Control (40 Open, 60 Close)		70342	70342
Filter (2” Thick)		81257 (2)	81257 (2)
		18 x 24	18 x 24
Motor, Economizer (EPA)		40101	40101
Enthalpy Control, H205A (EC)		70230	70230
Mixed Air Relay (MAR)		50164	50164
Mixed Air Sensor (MAS)		70229	70229
GreenWheel Blower, Flanged, 400 CFM		50780	50780
Energy Recovery Wheel		01226	01226
Motor, GreenWheel Drive		40007	40007
Fan Speed Controller (230 Volt)		70049	70049
Belting, 3/16” Round Urethane		P/80390	P/80390
Contactor, Compressor, 30 Amp	ACA	50020	n/a
Contactor, Compressor, 40 Amp	ACA	n/a	50030
Contactor, Compressor, 30 Amp	ACC/ACD	50040	50040
Circuit Breaker, 2 Pole, 50 Amp	ACA	70547	n/a
Circuit Breaker, 2 Pole, 60 Amp	ACA	n/a	70533
Circuit Breaker, 3 Pole, 40 Amp	ACC	70545	70545
Circuit Breaker, 3 Pole, 15 Amp	ACD	70888	70888
Fan Blower Control (BTR)		50419	50419
Lockout Relay (LOR)		50214	50214
Clip for Low Vibration		01257	01257

MAJOR PURCHASED PARTS		HAA1042	HAA1048
Relay, Outdoor Fan Motor (OFR)		50205	50205
Relay, B Damper		50420	50420
Low Voltage Transformer (50 VA)		50199	50199
Transformer (460 to 230 Volts)		50147	50147
		1.5 KVA	1.5 KVA
Transformer (460 to 230 Volts), GreenWheel		P/50007	P/50007
		2.0 KVA	2.0 KVA
Duct Furnace Heat Module: 45,000 Btu/Hr		n/a	n/a
Duct Furnace Heat Module: 67,500 Btu/Hr		n/a	n/a
Duct Furnace Heat Module: 90,000 Btu/Hr		n/a	n/a
Duct Furnace Heat Module: 75,000 Btu/Hr		50413	
Duct Furnace Heat Module: 100,000 Btu/Hr		50414	
Duct Furnace Heat Module: 125,000 Btu/Hr		50415	
Direct Spark Ignition Control, 24 VAC, 250 ma		50418	
Gas Valve, 2 Stage (3.5/1.2” WC High/Low)		20354	
Induced Draft Blower (230 v)		n/a	n/a
Induced Draft Blower (460 v)		n/a	n/a
Induced Draft Blower, 3000 RPM, 0.9 A, 230 v		30064	
Induced Draft Blower (460 v)			
Pressure Switch, Low (0.36” WC PR)		70377	
Pressure Switch, High (1.1” WC PF)		70373	
Flame Rollout Switch, L270			
Spark Igniter			
Flame Sensor			
In-Shot Burner (2.5 x 4.5)			
Limit Control, High (45,000 Btu/Hr)		n/a	n/a
Limit Control, High (67,500 Btu/Hr)		n/a	n/a
Limit Control, High (90,000 Btu/Hr)		n/a	n/a
Limit Control, High (75,000 Btu/Hr)		70372	
Limit Control, High (100,000 Btu/Hr)		70372	
Limit Control, High (125,000 Btu/Hr)		70372	
Limit Switch, High (45,000 Btu/Hr)		n/a	n/a
Limit Switch, High (67,500 Btu/Hr)		n/a	n/a
Limit Switch, High (90,000 Btu/Hr)		n/a	n/a
Limit Switch, High (75,000 Btu/Hr)			
Limit Switch, High (100,000 Btu/Hr)			
Limit Switch, High (125,000 Btu/Hr)			
Suppression Ignition Cable			
Nox Screen			
Gas Orifice, Natural Gas (Standard)		n/a	n/a
Gas Orifice, Propane (Standard)		n/a	n/a
Gas Orifice, Natural Gas (2.30 mm Standard)			20355
Gas Orifice, Propane (1.50 mm Standard)			20356
Relay, Heat/Blower, 460 Volt Only		50190	50190
Relay, Condenser Fan, 460 Volt Only		50190	50190

Chapter 9 Warranty

9.1 Marvair Limited Product Warranty

Marvair Inc., warrants its products to be free from defects in materials and workmanship under normal use to the original purchaser for the period of time in the table below. If any part of your product fails within 12 months from start-up, or 18 months from shipment from the factory, whichever comes first, Marvair, Inc. will furnish without charge, EXW Cordele, Georgia, the required replacement part. The owner must provide proof of the date of the original start-up. The contractor's invoice, the certificate of occupancy, or similar documents are examples of acceptable proof of the date of the original start-up.

Marvair, ICE, Eubank Products
90 Days[1] w/Flat Rate Labor[2] *(See Marvair, ICE, Eubank Flat Rate Labor Guidelines)*
1 Year Parts[2,3]
5 Years Compressor[2]

[1]If any part of your Marvair, Inc. unit fails within 90 days of the commencement of the warranty, Marvair, Inc. will furnish without charge, EX Works, Cordele, Georgia, the required replacement part and pay for the labor to replace the part in accordance with the Marvair, Inc. Flat Rate Labor Guidelines.

[2]All OTR (over the road) applications that are moved from one location to another: Factory Warranty applies only up to the point of initial start-up and test at all OEM manufacturing locations or subsequent facility. Once it goes into OTR service, the warranty expires immediately for compressor and sealed system components. This OTR exemption does not apply to relocatable classrooms, construction or office trailers.

[3]All warranty replacement parts shall be shipped Ground only. Expedited shipping is available upon request for additional cost.

The responsibility of the equipment owner includes:

1. To operate the equipment in accordance with the manufacturer's instructions.
2. To provide easy accessibility for servicing.
3. To check and reset any circuit breaker(s) and/or disconnect(s) prior to calling for service.
4. To keep the unit clean and free of dirt and containment and replace filters as required.
5. To keep the outdoor coil clean and free of leaves, paper, or other debris.
6. To pay the charges incurred when any of the above have not been done.
7. To pay for repair or replacement of any material or part other than those within the Marvair unit or controller.

Marvair, Inc., will not be responsible for labor after 90 days, transportation costs, delays or failures to complete repairs caused by events beyond our control (labor hours incurred due to required site-specific training, time waiting to gain access, or extended drive time for remote sites). This warranty does not cover:

1. Any transportation, related service labor, diagnosis calls, filter, driers, refrigerant, or any other material charges.
2. Damages caused by shipping, accident, abuse, negligence, misuse, fire, flood, or Acts of God.
3. Damages caused by operating or staging the unit in a corrosive environment.
4. Damages caused by improper application of the product.
5. Damages caused by failing to perform proper routine maintenance.
6. Expenses incurred for erecting, disconnecting or dismantling the product or installing the replacement part(s).
7. Products not installed or operated according to the included instructions, local codes, and good trade practices.
8. Products moved from the original installation site.
9. Products lost or stolen
10. Consequential damages or incidental expenses including losses to persons, property or business.
11. Modifications to original unit after it leaves the factory, such as breaking into any part of the sealed systems unless authorized in advance in writing by Marvair, Inc..
12. Damages as a result of operating as a construction site cooler / dehumidifier.

When labor (first 90 days only) is required, it must be performed during normal working hours (8:00 AM - 5:00 PM) Monday - Friday and must be performed by Marvair, Inc., personnel or a designated Service Representative.

The owner of the product may ship the allegedly defective or malfunctioning product or part to Marvair, Inc.,, at such owner's expense, and Marvair, Inc., will diagnose the defect and, if the defect is covered under this warranty, Marvair, Inc., will honor its warranty and furnish the required replacement part. All costs for shipment and risk of loss during shipment of the product to Marvair, Inc., and back to the owner shall be the responsibility and liability of the owner. Upon written request by an owner, Marvair, Inc., may arrange for remote diagnosis of the allegedly defective or malfunctioning product or part but all costs for transportation, lodging and related expenses with regard to such diagnostic services shall be the responsibility and liability of the owner.

An owner requesting performance under this Warranty shall provide reasonable access to the allegedly defective or malfunctioning product or part to Marvair, Inc., and its authorized agents and employees.

THIS WARRANTY CONSTITUTES THE EXCLUSIVE REMEDY OF ANY PURCHASER OF A MARVAIR HEAT PUMP OR AIR CONDITIONER AND IS IN LIEU OF ALL OTHER WARRANTIES, EXPRESSED OR IMPLIED, INCLUDING, WITHOUT LIMITATION, ANY IMPLIED WARRANTY OF MERCHANTABILITY OR FITNESS FOR USE, TO THE FULLEST EXTENT PERMITTED BY LAW. IN NO EVENT SHALL ANY IMPLIED WARRANTY OF MERCHANTABILITY OR FITNESS FOR USE EXCEED THE TERMS OF THE APPLICABLE WARRANTY STATED ABOVE AND MARVAIR SHALL HAVE NO OTHER OBLIGATION OR LIABILITY. IN NO EVENT SHALL MARVAIR BE LIABLE FOR INCIDENTAL OR CONSEQUENTIAL DAMAGES OR MONETARY DAMAGES.

THIS WARRANTY GIVES YOU SPECIFIC LEGAL RIGHTS, AND YOU MAY ALSO HAVE OTHER RIGHTS WHICH VARY FROM STATE-TO-STATE. Some states do not allow limitations or exclusions, so the above limitations and exclusions may not apply to you.